TOOLING AND EQUIPMENT INTERNATIONAL
FOUNDRY ADDITION
12550 AND 12560 TECH CENTER DRIVE, LIVONIA, MI 48150

TOOLING AND EQUIPMENT INTERNATIONAL
FOUNDRY ADDITION
12550 AND 12560 TECH CENTER DRIVE, LIVONIA, MI

PARCEL ID

PARCEL ID: XXXXX

LEGAL DESCRIPTION

LAND IN THE CITY OF LIVONIA, COUNTY OF WAYNE, STATE OF MICHIGAN, DESCRIBED AS:

UNIT 5, LIVONIA TECH CENTER CONDOMINIUM

A PARCEL OF LAND SITUATED IN THE SOUTHEAST 1/4 OF SECTION 26, TOWN 1 SOUTH, RANGE 9 EAST, CITY OF LIVONIA, WAYNE COUNTY, MICHIGAN BEING PART OF A UNIT 5 REPLAT NO. 1 OF WAYNE COUNTY CONDOMINIUM SUBDIVISION PLAN NO. 331 DESCRIBED AS: BEGINNING AT A POINT DISTANT N00°26'43" WEST, 2257.92 FEET AND N89°33'17" EAST, 10.00 FEET FROM THE SOUTH 1/4 CORNER OF SECTION 26 SAID POINT BEING A CORNER OF UNIT 3 OF THE REPLAT NO. 1 OF THE CONDOMINIUM PLAND AND PROCEEDING THENCE N 00°26'43" W, 321.81 FEET; THENCE N 89°34'53", 724.78 FEET; THENCE S 00°26'43" E, 356.81 FEET TO A POINT ON THE RIGHT-OF-WAY LINE OF TECH CENTER DRIVE; THENCE S 89°39'25" WEST 74.75 FEET; THENCE N 89°58'59" WEST, 248.25 FEET; THENCE 31.29 FEET ALONG THE ARC OF A CURVE CONCAVE TO THE NORTH WITH A RADIUS OF 40.00 FEET, A CENTRAL ANGLE OF 44°49'12" AND A CHORD OF 30.50 FEET BEARING N 67°34'23" WEST; THENCE 82.01 FEET ALONG THE ARC OF A CURVE CONCAVE TO THE SOUTH WITH A RADIUS OF 52.21 FEET A CENTRAL ANGLE OF 90°00'00" A CHORD OF 73.84 FEET BEARING S 89°50'13" W; THENCE N 45°09'47" W, 26.33 FEET; THENCE N 89°58'59" W, 281.33 FEET TO THE POINT OF BEGINNING. CONTAINING 5.656 ACRES MORE OR LESS.

LOCATION MAP

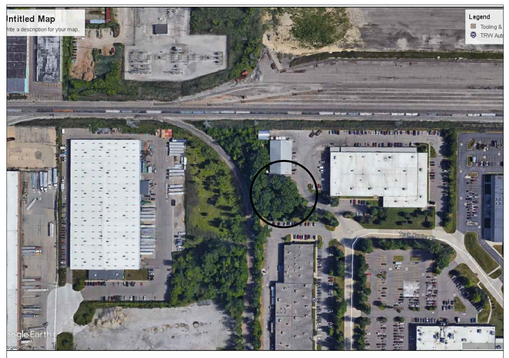

PROJECT NORTH

ZONING ANALYSIS

CURRENT ZONING: M1
ADJACENT ZONING TO THE NORTH: M1
ADJACENT ZONING TO THE EAST: M1
ADJACENT ZONING TO THE SOUTH: M1
ADJACENT ZONING TO THE WEST: M1

PERMITTED USE:
PER CITY OF LIVONIA ZONING ORDINANCE FOUNDRIES ARE A PROHIBITED USE IN AN M1 DISTRICT

MINIMUM AREA OF SITE:
= NA

MINIMUM SITE WIDTH:
=NA

MAXIMUM PERMITTED LOT COVERAGE:
=NA

AREA OF EXISTING BUILDINGS
CASTING DEVELOPMENT CENTER (FOUNDRY)
=10000 SF
FACTORY =51630 SF
OFFICE =12625 SF

PROPOSED AREA OF ADDITION TO FOUNDRY
=16440 SF
PROPOSED AREA OF SHED ROOF ADDITION
=2500 SF

MAXIMUM BUILDING HEIGHT:
=50 FT
PROPOSED BUILDING HEIGHT:
=42 FT

REQUIRED FRONT YARD SETBACK:
50 FT
PROVIDED FRONT YARD SETBACK:
50 FT

REQUIRED READ YARD SETBACK:
50 FT
PROVIDED REAR YARD SETBACK:
50 FT

REQUIRED SIDEYARD SETBACK:
20 FT
PROVIDED SIDEYARD SETBACK:
20 FT

MINIMUM PARKING REQUIRED
1 SPACE PER EMPLOYEE ON LARGEST SHIFT= 100 PROPOSED

PROPOSED TOTAL PARKING
100 SPACES

STATEMENTS

SIGNAGE
ALL SIGNAGE SHALL CONFORM TO THE LOCAL REGULATIONS.

LANDSCAPE AND PROPERTY MAINTENANCE
THE OWNERS AGREE TO SEASONAL MAINTENANCE PROGRAM AND WILL REPLACE ALL DISEASED, DEAD OR DAMAGED PLANTS, REPLENISH MULCH, CONTROL WEEDS, FERTILIZE AND PRUNE BEGINNING UPON COMPLETION OF CONSTRUCTION AND LANDSCAPING.
OWNER AGREES TO PICK UP DEBRIS ON PROPERTY AND BLOWING FROM PROPERTY WEEKLY.
THERE WILL BE NO IMPACT ON AIR/ WATER QUALITY OR NOISE BY THIS ADDITION.

MAINTENANCE OF PAVEMENT
OWNER AGREES THAT PAVED SURFACES, WALKWAYS, SIGNS, LIGHTING AND OTHER STRUCTURES AND SURFACES SHALL BE MAINTAINED IN A SAFE, ATTRACTIVE CONDITION AS ORIGINALLY DESIGNED AND CONSTRUCTED. PARKING LOT STRIPING AND MARKINGS SHALL BE MAINTAINED IN A CLEARLY VISIBLE CONDITION.

BUILDING USE
THE HOURS OF OPERATION WILL BE MONDAY THROUGH SATURDAY FROM 7:00 AM UNTIL 7:00 PM.

DESCRIPTION OF THE CONSTRUCTION SCHEDULE
CONSTRUCTION IS EXPECTED TO BEGIN SUMMER OF 2021.
CONSTRUCTION IS EXPECTED TO BE COMPLETE BY FALL OF 2021.

THE CONSTRUCTION WILL NOT BE PHASED

SITE LIGHTING
ALL SITE LIGHTING WILL BE SHIELDED TO PREVENT LIGHT SPILL TO NEIGHBORING PROPERTIES

SITE LANDSCAPING
ALL SITE LANDSCAPING WILL BE INSTALLED PER THE REQUIREMENTS OF THE LOCAL ORDINANCE.

CONSTRUCTION STANDARDS
ALL CONSTRUCTION SHALL BE REQUIRED TO CONFORM TO THE CURRENT STANDARDS, SPECIFICATIONS, AND GENERAL CONDITIONS OF THE LOCAL MUNICIPALITY.

DEC-17-96 TUE 11:01 TOOLING & EQUIP INTL FAX NO. 13136221780 P.04

PLANNING COMMISSION

JACK ENGEBRETSON, Chairman
WILLIAM LaPINE, Vice Chairman
ROBERT ALANSKAS, Secretary

PATRICIA BLOMBERG
JAMES C. McCANN
R. LEE NORROW
C. DANIEL PIRRICECCHI

JACK E. KIRKSEY
MAYOR

JOHN J. NAGY
PLANNING DIRECTOR

H. G. SHANE
ASS'T. PLANNING DIRECTOR

33000 CIVIC CENTER DRIVE
LIVONIA, MICHIGAN 48154-3097
421-2000
FAX: 458-9007

April 24, 1996

Mr. Clifford Rothwell, President
Tooling & Equipment International
34018 Beacon Road
Livonia, MI 48150

Dear Mr. Rothwell:

This is to acknowledge receipt of your letter dated April 18, 1996 and we are pleased to read of your plans to keep your foundry tooling business in Livonia. In that connection you questioned whether or not your proposed use of property located north of Plymouth Road on the west side of Tech Center Drive would be approved for the foundry tooling business within a planned 64,000 square foot plant as well as a cast aluminum operation within a stand alone 10,000 square foot building.

In this regard, and after reviewing your existing place of business and evaluating the proposed system to be used in the cast aluminum operation, we have concluded that the planned use of the proposed property as described above would be permitted by the existing zoning of the M-1 district regulations.

It was a pleasure meeting with you and touring your facilities at 34018 Beacon Road and we look forward to your continued growth and development in the new location.

Very truly yours,

John J. Nagy, Planning Director

Jack Fegan, Director of Inspection

JJN:jg

cc: Mr. Dave Woodcox, Inspection Dept.
Mr. Rick Niedieck, LEDO

Recycled Paper

SUBMITTALS

DIRECTORY

ARCHITECT
HOPPE DESIGN
47032 McBRIDE
BELLEVILLE, MI 48111
734-218-2492

APPLICANT AND OWNER
OLIVER JOHNSON
TOOLING AND EQUIPMENT INT
12560 TECH CENTER DRIVE
LIVONIA, MI 48150

SANITARY UTILITY
THE CITY OF LIVONIA
12973 FARMINGTON RD
LIVONIA, MI

S/M/E/P CONSULTANT
GODWIN AND ASSOCIATES
1200 E WOODHURST, BLDG P
SPRINGFIELD, MO 65804
417-887-2667

SURVEYOR
SME
43980 PLYMOUTH OAKS BLVD,
PLYMOUTH, MI 48170
734-454-9900

LOCAL PLANNING AND ZONING
CITY OF LIVONIA
33000 CIVIC CENTER DR,
LIVONIA, MI 48154

CIVIL ENGINEER
KRIS ENLOW
BECKETT AND RAEDER
535 W WILLIAMS SUITE 101
ANN ARBOR, MI 48103

DRAWING INDEX

CIVIL
DT TITLE SHEET
SURVEY TOPOGRAPHIC SURVEY
EC1.0 EXISTING CONDITIONS
C1.0 SESC AND DEMOLITION
C1.1 DEMOTION
C2.0 LAYOUT, GRADING AND STORMWATER
C2.1 EXHIBITS
C3.0 DETAILS
C3.1 DETAILS
C3.2 DETAILS
L1.0 LANDSCAPE
STANDARD SESC DETAILS
STANDARD STORMWATER DETAILS
STANDARD STORMWATER DETAILS
STANDARD STORMWATER DETAILS

STRUCTURAL
S001 STRUCTURAL NOTES
S002 SPECIAL INSPECTIONS
S003 SPECIFICATIONS
S101 PARTIAL FOUNDATION PLAN
S102 PARTIAL FOUNDATION PLAN
S103 DETAILS
S201 PARTIAL ROOF FRAMING
S202 PARTIAL ROOF FRAMING

ARCHITECTURAL
A002 CODE REVIEW
A101 FLOOR PLAN
A102 PARTIAL FLOOR PLANS
A103 LARGE SCALE PLANS
A104 ROOF PLAN
A201 EXTERIOR BUILDING ELEVATIONS
A301 SECTIONS
A401 WALL SECTIONS
A501 SCHEDULES
A502 DETAILS
A503 DETAILS

MECHANICAL AND PLUMBING

M1 HVAC
M2 SCHEDULES
M3 ERV

P1 UNDERFLOOR PLUMBING
P2 OVERHEAD PLUMBING
P3 RISER PLANS

ELECTRICAL
E0 SCHEDULES
E1 ELECTRICAL SITE PLAN
E2 FACILITY LIGHTING PLAN
E3 FACILITY POWER PLAN
E4 ONE LINE DIAGRAM
E5 PANELBOARD
E6 PANELBOARD

HOPPE DESIGN, LLC
47032 McBRIDE, BELLEVILLE, MI 48111
734-218-2492

REVISIONS
ADD 1 5.19.21

PROJECT: 2003
DATE: 4.16.21
DRAWN: WCH
CHECKED: WCH

STATE OF MICHIGAN
WAYDE C. HOPPE
ARCHITECT
No. 1301036190
LICENSED ARCHITECT

WAYDE C. HOPPE

RELEASED FOR PERMITTING 4.16.21

TITLE SHEET

DT

COPYRIGHT ALL RIGHTS RESERVED BY WAYDE C. HOPPE, ARCHITECT
NOT TO BE COPIED OR REPRODUCED WITHOUT WRITTEN PERMISSION

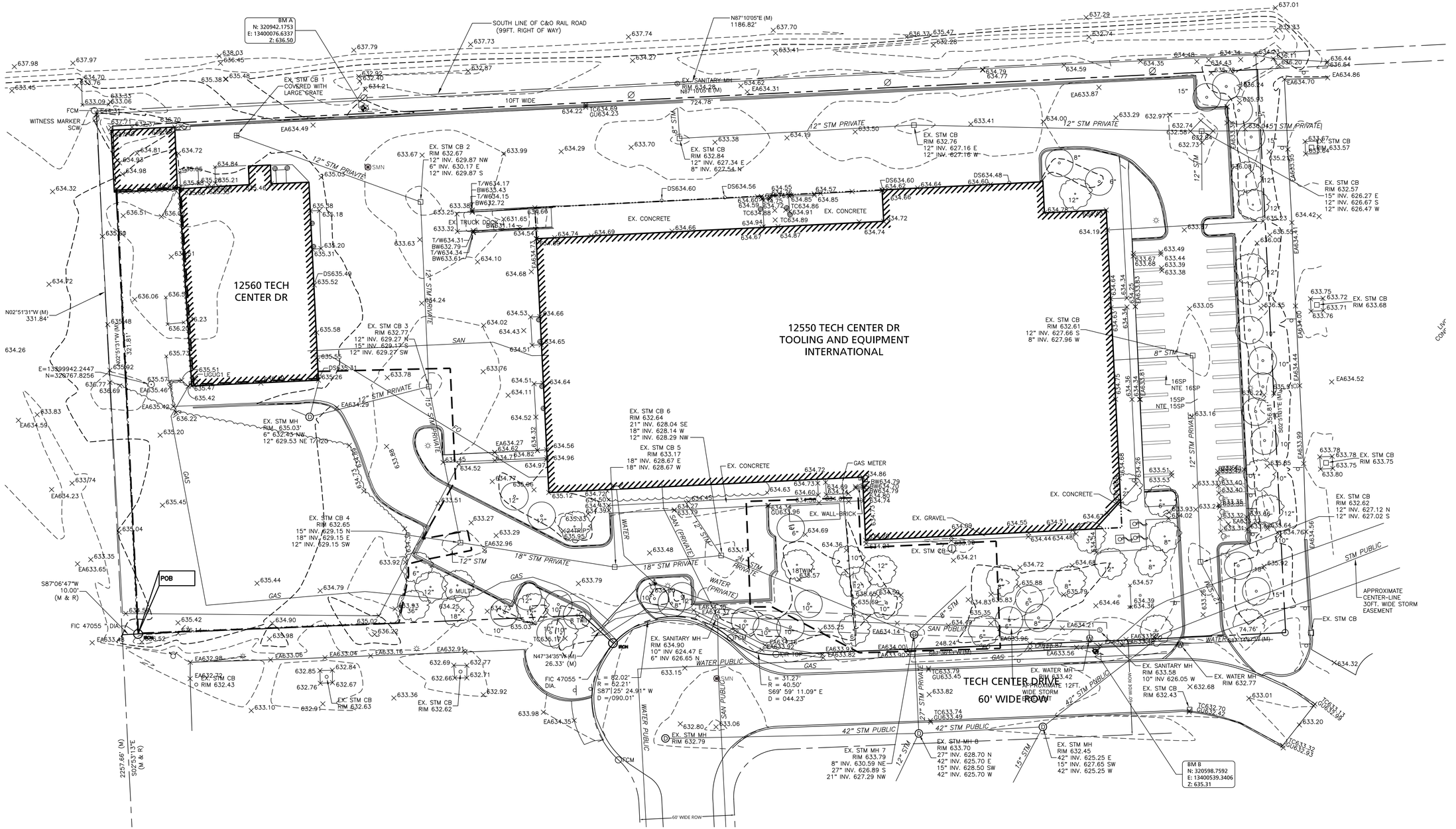

EXISTING CONDITIONS NOTES

1. CONTRACTOR SHALL CALL MISS DIG (811) A MINIMUM OF THREE WORKING DAYS PRIOR TO START OF CONSTRUCTION.
2. CONTRACTOR SHALL INVESTIGATE EXTENT AND LOCATION OF ALL EXISTING UTILITIES AND SHALL BE RESPONSIBLE FOR PROTECTION AND RESTORATION OF SAME IF DAMAGED AS A RESULT OF CONTRACTOR'S OPERATIONS.
3. CONTOUR INTERVAL SHOWN IS 1-FOOT.
4. ALL ELEVATIONS SPECIFIED SHALL BE FIELD MEASURED AND NOTED AS SO ON THE PLANS WITH THE INCLUSION OF F.M. (FIELD MEASURED) AFTER EACH INVERT AND RIM ELEVATIONS.

SURVEY PREPARED BY:

FREDD ZIOBRON, P.S,
SOIL & MATERIAL ENGINEERS
43980 PLYMOUTH OAKS BLVD, PLYMOUTH, MI
48170

BENCHMARK NOTES

BM A	BM B
N: 320942.1753	N: 320598.7592
E: 13400076.6337	E: 13400539.3406
ELEVATION = 636.50	ELEVATION = 635.31
(NAVD88 DATUM)	(NAVD88 DATUM)

EXISTING CONDITIONS LEGEND

PARCEL LINE	T/W634.17	TOP OF WALL	LIGHTPOLE
RIGHT-OF-WAY LINE	BW633.43	BOTTOM OF WALL	FLAG POLE
LIMIT OF DISTURBANCE	GU633.34	GUTTER	BOLLARD
VEGETATION		BENCH MARK	PROPERTY IRON
FENCE LINE		HYDRANT	DECIDUOUS TREE
CURB AND GUTTER		GATE VALVE	CONIFEROUS TREE
ELECTRIC LINE		WATER MAIN MANHOLE	
GAS MAIN		SQUARE CATCH BASIN	
WATER MAIN		ROUND CATCH BASIN	
STORM MAIN	SMN	SET MAG NAIL	
SANITARY LINE		SANITARY MANHOLE	
FIBER OPTICS LINE		GAS VENT	
MINOR CONTOUR		ELECTRICAL BOX	
MAJOR CONTOUR		STORM MANHOLE	
EXISTING BUILDING		SECTION CORNER	
634.20 SPOT ELEVATION		SIGN	
TC633.64 TOP OF CURB		UTILITY POLE	
TA633.93 TOP OF ASPHALT		RIGHT-OF-WAY MARKER	

Know what's below. Call before you dig.

0 15 30 60 90 120

B R
Beckett&Raeder
Landscape Architecture Planning, Engineering & Environmental Services

Beckett & Raeder, Inc.
535 West William, Suite 101
Ann Arbor, MI 48103

734 663.2622 ph
734 663.6759 fx

Consultants

Seal

Project Title

Tooling and Equipment Int
Foundry Addition

12550 and 12560 Tech Center Drive
Livonia, MI

Sheet Title

Existing Conditions

Dates

Dates	Issued for
02.16.21	Owner Review
03.10.21	Owner Review
03.22.21	City Review
04.22.21	City Review

Scale

1" = 30'

Quality Control

Drawn:	AT
Checked:	KE
Approved:	KE

Project Number

2020.13

Sheet Number

EC1.0

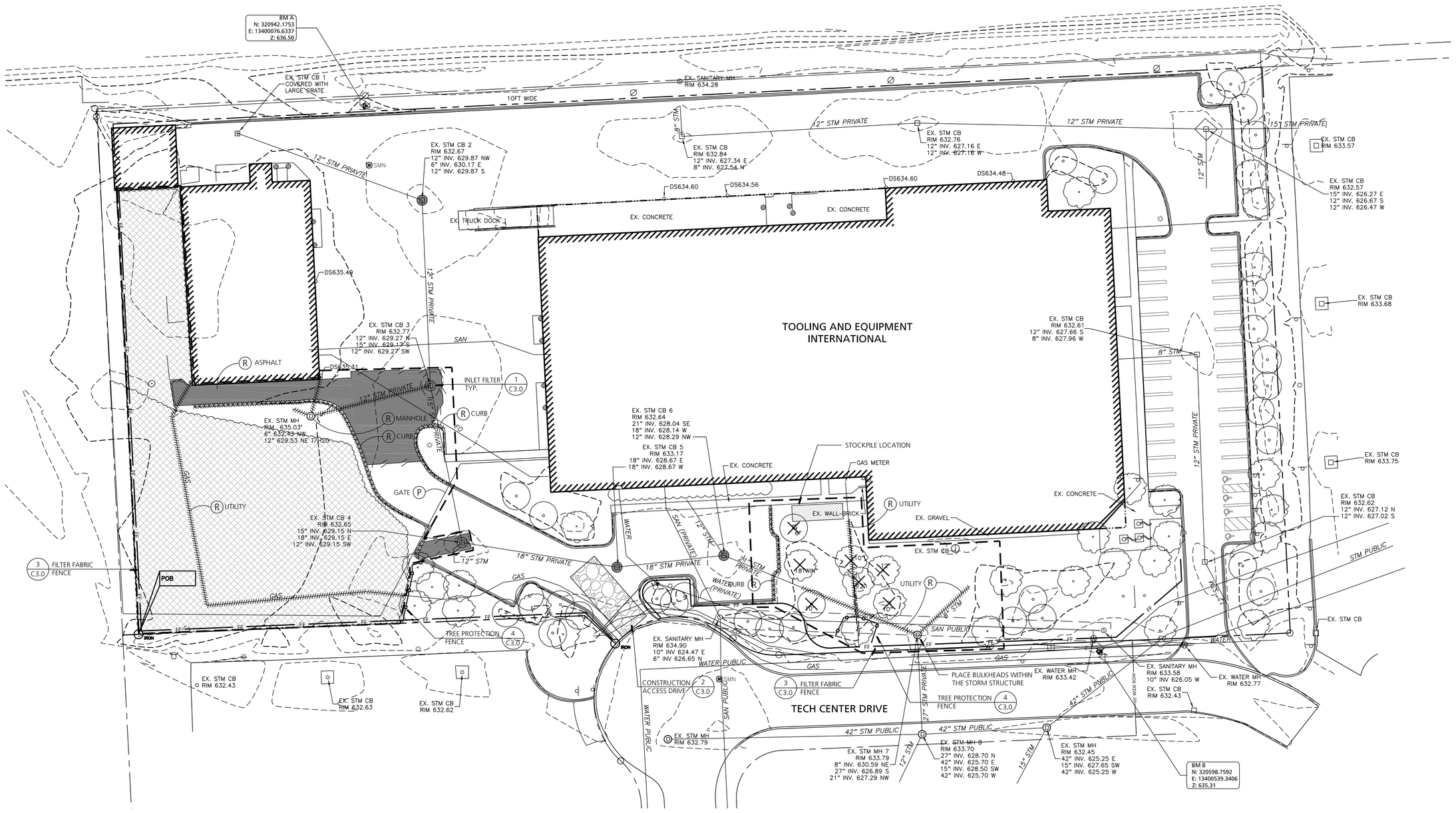

SESC NOTES

1. THIS PROJECT MUST BE CONSTRUCTED IN COMPLIANCE WITH PART 91 OF MICHIGAN NATURAL RESOURCES AND ENVIRONMENTAL PROTECTION ACT 451 OF 1994, AS AMENDED, THE SOIL EROSION AND SEDIMENT CONTROL ACT.
2. PRIOR TO ANY SITE DISTURBANCE, INCLUDING DEMOLITION, CONTRACTOR SHALL PLACE EROSION CONTROL MEASURES ON ALL EXISTING STORM SEWER STRUCTURES AFFECTED BY WORK IN THIS CONTRACT. SUCH EROSION CONTROL MEASURES SHALL BE MAINTAINED UNTIL PERMANENT MEASURES ARE IN PLACE.
3. CONTRACTOR SHALL PLACE TEMPORARY EROSION AND SEDIMENTATION CONTROL MEASURES AS REQUIRED AND SHOWN ON PLANS.
4. CONTRACTOR SHALL PROVIDE AND MAINTAIN ALL EROSION CONTROL MEASURES AS REQUIRED BY STATE AND LOCAL GOVERNING AUTHORITIES.
5. DAILY INSPECTIONS SHALL BE MADE BY THE CONTRACTOR TO DETERMINE THE EFFECTIVENESS OF EROSION AND SEDIMENT CONTROL MEASURES. ANY NECESSARY REPAIRS SHALL BE MADE WITHOUT DELAY.
6. ALL EROSION AND SEDIMENT RESULTING FROM WORK ON SITE SHALL BE CONTAINED ON SITE AND NOT ALLOWED TO COLLECT IN ANY OFF-SITE AREAS OR WATERWAYS. WATERWAYS INCLUDE BOTH NATURAL AND MAN-MADE OPEN DITCHES, STREAMS, STORM DRAINS, RIVERS, OR PONDS.
7. CONTRACTOR SHALL PLACE TEMPORARY EROSION AND SEDIMENTATION CONTROL MEASURES AS REQUIRED AND SHOWN ON PLANS.
8. CONTRACTOR SHALL PLACE INLET FILTER PROTECTION ON ALL STORM STRUCTURES AFFECTED BY THIS PROJECT.
9. ALL TEMPORARY SEDIMENT BASINS USED DURING CONSTRUCTION SHALL BE CLEANED AND ALL SEDIMENT LEGALLY DISPOSED OF PRIOR TO STABILIZATION. REMOVAL OF ALL FINES AND SEDIMENT IS CRITICAL IN AREAS WHERE INFILTRATION PRACTICES SHALL BECOME PERMANENT BEST MANAGEMENT PRACTICE.
10. CONTRACTOR SHALL CLEAN DEBRIS FROM STREETS ON A DAILY BASIS AS NEEDED. STREETS SHALL BE SWEPT WEEKLY.

DEMOLITION NOTES

1. CONTRACTOR SHALL CALL MISS DIG (811) A MINIMUM OF THREE WORKING DAYS PRIOR TO START OF CONSTRUCTION.
2. CONTRACTOR SHALL INVESTIGATE EXTENT AND LOCATION OF EXISTING UTILITIES AND SHALL BE RESPONSIBLE FOR PROTECTION AND RESTORATION OF SAME IF DAMAGED AS A RESULT OF CONTRACTOR'S OPERATIONS.
3. ALL ITEMS NOT INDICATED FOR REMOVAL SHALL REMAIN UNDISTURBED AND PROTECTED. CONTRACTOR SHALL FULLY RESTORE ANY ITEMS/MATERIALS DAMAGED DURING CONSTRUCTION AT NO ADDITIONAL COST TO THE OWNER.
4. ALL CONCRETE PAVEMENT AND CURB REMOVALS SHALL BE TO THE NEAREST JOINT BEYOND INDICATED EXTENT.
5. CONTRACTOR SHALL MAINTAIN CLEAN SAW CUT EDGES FOR PROPOSED WORK TO ABUT. BROKEN EDGES RESULTING FROM CONTRACTOR'S FAILURE TO PROTECT THE EDGE WILL BE SAW CUT BEYOND THE BREAKS AT THE NEAREST JOINT, AT THE CONTRACTOR'S EXPENSE.
6. ALL REMOVALS SHALL BE SAW CUT FULL DEPTH AND COORDINATED WITH LAYOUT / GRADING PLANS.
7. REMOVALS SHALL INCLUDE SUBSOIL/EXISTING BASE MATERIALS TO FULL DEPTH REQUIRED FOR INSTALLATION OF NEW WORK INCLUDING BASE COURSE. ALL EXCAVATIONS SHALL PROVIDE ADEQUATE SOIL SUPPORT THROUGH THE USE OF ADEQUATE CUT SLOPES OR STRUCTURAL SHORING.
8. OWNER TO COORDINATE WITH RESPECTIVE UTILITY COMPANY FOR REMOVAL OF EXISTING GAS LINES.
9. PROJECT AREA IS PARTIALLY IRRIGATED. REMOVE EQUIPMENT AFFECTED BY NEW WORK AND SALVAGE TO OWNER. CUT, CAP AND RECORD LOCATIONS OF ALL LINES.
10. CONTRACTOR SHALL REPAIR ALL DISTURBED TURF AREAS OUTSIDE OF PROJECT LIMITS DAMAGED DURING CONSTRUCTION.
11. ALL TOPSOIL AND ORGANIC MATERIAL SHALL BE REMOVED FROM UNDER PROPOSED BUILDING, FOOTINGS, SLABS, AND PAVED AREAS.
12. ALL SPOIL MATERIAL, INCLUDING TOPSOIL, TO BE REMOVED OFF SITE AND DISPOSED IN A LEGAL MANNER.
13. LAWN AND TOPSOIL REMOVALS AROUND EXISTING TREES TO BE PERFORMED WITH EXTREME CARE. REMOVALS TO BE COMPLETED BY HAND. NO HEAVY EQUIPMENT ALLOWED BENEATH TREE CANOPY.
14. DISCHARGE OF WATER, DUST, OR DEBRIS FROM CONCRETE AND ASPHALT WORK TO STORM OR SANITARY SYSTEMS IS PROHIBITED.
15. STORM DRAINS MUST BE PROTECTED FROM DUST AND DEBRIS.
16. ANY WATER USED DURING CONCRETE AND ASPHALT WORK (INCLUDING SWEEPING AND SAWCUTTING) MUST BE CONTAINED AND COLLECTED FOR PROPER DISPOSAL. SUGGESTED CONTROLS INCLUDE WET VACUUM OR ABSORBENTS.

SOIL TYPES

THE NATURAL RESOURCE CONSERVATION SERVICE SOIL SURVEY INDICATES THE SITE IS COMPRISED OF URBAN LAND RIVERFRONT COMPLEX (UrbarB) WITH A DENSE SUBSTRATUM AND 0-4% SLOPES, AND UDORTHENTS ARTIFACTS (EtmagB) WITH 0-4% SLOPES. THE SOIL DESCRIPTION INDICATES THAT THE URBAN LAND RIVERFRONT COMPLEX SOIL IS LARGELY COMPRISED OF SANDY LOAM, VERY ARTIFACTUAL SANDY LOAM, GRAVELLY-ARTIFACTUAL LOAM, VERY ARTIFACTUAL LOAM AND CLAY AND IS WELL DRAINED. THE SOIL DESCRIPTION INDICATES THAT THE UDORTHENTS ARTIFACTS SOIL IS LARGELY COMPRISED OF ARTIFACTS, ARTIFACTUAL SAND AND LOAM AND IS WELL DRAINED.

NOTE: THIS PLAN ILLUSTRATES THE MINIMUM SOIL EROSION AND SEDIMENTATION CONTROLS NEEDED TO PREVENT SILTS FROM LEAVING THE SITE AND IS SUBJECT TO CHANGE AS CONDITIONS IN THE FIELD WARRANT.

DEMOLITION & SESC LEGEND

- PARCEL LINE
- RIGHT-OF-WAY LINE
- LIMIT OF DISTURBANCE
- TREE PROTECTION FENCE
- FF — FILTER FABRIC FENCE
- INLET FILTER / SEDIMENT TRAP
- SAWCUT
- XXXXXXXXXXXXXXXX — CURB REMOVAL
- UTILITY REMOVAL
- GRAVEL CONSTRUCTION ENTRY
- STOCKPILE LOCATION
- REMOVE BRUSH/TREES/ TOPSOIL/FILL/STUMPS
- R — REMOVE ITEM
- P — PROTECT ITEM
- S — SALVAGE ITEM TO OWNER
- REMOVE TREE

SESC CONSTRUCTION SEQUENCE

CONSTRUCTION SEQUENCE	OPERATION TIME SCHEDULE (2021)						
	MAY	JUNE	JULY	AUG	SEPT	OCT	NOV
TEMPORARY CONTROL MEASURES							
TREE REMOVAL & STUMP GRINDING							
TOPSOIL / SEDIMENT CONTROL							
TEMPORARY ACCESS							
PERMANENT CONTROL MEASURES							
SITE CONSTRUCTION							
FINISH GRADING							
SEEDING AND EROSION BLANKETS							

Know what's **below.** **Call** before you dig.

0 15 30 60 90 120

B R i
Beckett&Raeder
Landscape Architecture Planning, Engineering & Environmental Services

Beckett & Raeder, Inc.
535 West William, Suite 101
Ann Arbor, MI 48103

734 **663.2622** ph
734 **663.6759** fx

Consultants

Seal

Project Title

Tooling and Equipment Int
Foundry Addition

12550 and 12560 Tech Center Drive
Livonia, MI

Sheet Title

Soil Erosion and Sedimentation & Demolition Plan

Dates

Dates	Issued for
02.16.21	Owner Review
03.10.21	Owner Review
03.22.21	City Review
04.22.21	City Review

Scale

1" = 30'

Quality Control

Drawn: AT
Checked: KE
Approved: KE

Project Number

2020.13

Sheet Number

C1.0

SESC CONTROLS MAINTENANCE SCHEDULE

(POST CONSTRUCTION BY OWNER)

TASK	COMPONENT: STORM SEWER SYSTEM	CATCH BASIN SUMPS AND TRENCH DRAINS	TREATMENT UNITS	CATCH BASIN INLET CASTINGS	LANDSCAPE SLOPE STABILIZATION	YARD BASIN OVERFLOW STRUCTURES	SCHEDULE
INSPECT FOR SEDIMENT ACCUMULATION	X	X	X	X	X	X	ANNUALLY AT A MINIMUM
REMOVAL OF SEDIMENT ACCUMULATION	X	X	X	X	X	X	AS NEEDED
INSPECT FOR FLOATABLES AND DEBRIS	X	X	X	X	X	X	ANNUALLY AT A MINIMUM
REMOVAL OF FLOATABLES AND DEBRIS	X	X	X	X	X	X	AS NEEDED
INSPECT FOR EROSION	X	X	X	X	X	X	AS NEEDED AND PRIOR TO TURNOVER
RE-ESTABLISH VEGETATION	X	X	X	X	X	X	AS NEEDED AND PRIOR TO TURNOVER
CLEANING STREETS/PAVEMENT					X		AS NEEDED
VACUUM TO REMOVE SEDIMENT	X	X	X	X	X	X	ANNUALLY AT A MINIMUM
MOWING AND/OR PLANTING MAINTENANCE							AS NEEDED

SITE LOCATION MAP



LEGAL DESCRIPTION

LAND IN THE CITY OF LIVONIA, COUNTY OF WAYNE, STATE OF MICHIGAN, DESCRIBED AS:

UNIT 5, LIVONIA TECH CENTER CONDOMINIUM

A PARCEL OF LAND SITUATED IN THE SOUTHEAST 1/4 OF SECTION 26, TOWN 1 SOUTH, RANGE 9 EAST, CITY OF LIVONIA, WAYNE COUNTY, MICHIGAN BEING PART OF A UNIT 5 REPLAT NO. 1 OF WAYNE COUNTY CONDOMINIUM SUBDIVISION PLAN NO. 331 DESCRIBED AS: BEGINNING AT A POINT DISTANT N00°26'43" WEST, 2257.92 FEET AND N89°33'17" EAST, 10.00 FEET FROM THE SOUTH 1/4 CORNER OF SECTION 26 SAID POINT BEING A CORNER OF UNIT 3 OF THE REPLAT NO. 1 OF THE CONDOMINIUM PLAND AND PROCEEDING THENCE N 00°26'43" W, 321.81 FEET; THENCE N 89°34'53", 724.78 FEET; THENCE S 00°26'43" E, 356.81 FEET TO A POINT ON THE RIGHT-OF-WAY LINE OF TECH CENTER DRIVE; THENCE S 89°39'25" WEST 74.75 FEET; THENCE N 89°58'59" WEST, 248.25 FEET; THENCE 31.29 FEET ALONG THE ARC OF A CURVE CONCAVE TO THE NORTH WITH A RADIUS OF 40.00 FEET, A CENTRAL ANGLE OF 44°49'12" AND A CHORD OF 30.50 FEET BEARING N 67°34'23" WEST; THENCE 82.01 FEET ALONG THE ARC OF A CURVE CONCAVE TO THE SOUTH WITH A RADIUS OF 52.21 FEET A CENTRAL ANGLE OF 90°00'00" A CHORD OF 73.84 FEET BEARING S 89°50'13" W; THENCE N 45°09'47" W, 26.33 FEET; THENCE N 89°58'59" W, 281.33 FEET TO THE POINT OF BEGINNING. CONTAINING 5.656 ACRES MORE OR LESS.

OWNER

Tooling and Equipment Int Foundry Addition
12550 and 12560 Tech Center Drive
Livonia, MI 48150-2192
(734) 522-1422
Oliver Johnson, President

PLAN PREPARER

B R i
Beckett&Raeder
Landscape Architecture
Planning & Engineering

Beckett & Raeder, Inc.
535 West William, Suite 101
Ann Arbor, MI 48103

734 663.2622 ph
734 663.6759 fx

UTILITY CONTACT LIST

Sanitary & Water – City of Livonia, DPW:
Tom Wilson
12973 Farmington Road
Livonia, MI 48150-4202
Phone: 734.466.2632
Email: twilson@ci.livonia.mi.us

Fire – City of Livonia Fire Department:
David Heavener
Dispatch for Fire/Police
14190 Farmington Road
Livonia, MI 48154
Phone: 734.466.2431
After 5:00pm: 734.466.2470

Wayne County Traffic Signals:
Eric Lentz, P.E.
Traffic Operations Section
Division of Roads
29900 Goddard Road
Detroit, MI 48242
Phone: 734.955.2161
Fax: 734.955.2338
Email: Elentz@waynecounty.com

Wayne County DPS:
Hikmat Kassem, P.E.
Assistant Permit Engineer
33809 Michigan Avenue
Wayne, MI 48184
Phone: 734.595.6504, Ext. 2038
Fax: 734.595.6356
Email: Hkassem@waynecounty.com

MDOT Taylor TSC:
Andrea L. Jones
Utility and Permit Technician
6510 Telegraph Road
Taylor, MI 48180
Phone: 313.375.2402
Fax: 313.295.0822
Email: jonesan@michigan.gov

CSX Transportation, Inc.:
Charlie Myers
500 Water Street, J180
Jacksonville, FL 32202
Phone: 904.633.1503
Fax: 904.306.5037
Email: charlie_myers@CSX.com
Emergency: 1.800.232.0144

Buckeye Partners, L.P.:
Teriann Foley
9999 Hamilton Boulevard 5 Tek Park
Breinigsville, Pennsylvania 18031
Phone: 610.904.4418
Emergency: 800.331.4115

Sunoco Logistics
Tim E Richardson – Pipeline Inspector
7155 Inkster Road
Taylor, MI 48180-1481
Phone: 313-292-8850
Mobile: 313-319-9645

Midwest Fiber Network, LLC:
Richard Trgovec
OSP Engineer
6070 N. Flint Road
Glendale, WI 53209
Phone: 414.672.5612
Emergency Phone: 866.831.1661
rtrgovec@midwestfibernetworks.com
Website: midwestfibernetworks.com

Telephone – AT&T:
Anthony Hoover
Metro South Engineering
17651 Michigan Avenue, Room 201
Dearborn, MI 48126
Phone: 313.240.5498

Telephone – AT&T, (R.O.W / Const. Concerns):
Kevin Logan
17651 Michigan Avenue
Dearborn, MI 48126
Phone: 313.240.5482
Email: KL2915@att.com

Gas – Consumers Energy:
Chris Schneider
11801 Farmington Road
Livonia, MI 48150
Phone: 734.513.6277
Fax: 734.513.6266
Emergency: 800.477.5050
Email: christopher.schneider@cmsenergy.com

Electric – DTE Energy:
Tiffany S. Davis
Supervisor – Regional Planning
8001 Haggerty South
Belleville, MI 48111
Phone: 734.397.4015
Email: tiffany.s.davis@dteenergy.com

Anything Streetlight (other than outages)
Stephanie Sharlow
734.397.4091

ITC – Local Government & Community Affairs:
Cynthia Stump
27175 Energy Way
Novi, MI 48377
Phone: 248.946.3503
Fax: 248.946.3492
Email: cstump@itctransco.com

Cable – Spectrum:
David A. Bujak
31889 Industrial Rd.
Livonia, MI 48150
Phone: 734.402.5488
Email: davidbujak@charter.com

TURNKEY Network Solutions:
Erica Bennett
Permit Coordinator
7020 Southbelt Drive SE
Caledonia, MI 49316
Phone: 616.455.9840
Fax: 616.455.9845

Fibertech Networks, LLC:
Earl Knab – Project Manager
Renee Guider – Permits & Application Administrator
300 Meridian Centre
Rochester, NY 14618
Phone: 585.202.1846
Phone: 585.697.5193
Earl Knab – eknab@fibertech.com
Renee Guider – rguider@fibertech.com

123 Net:
Jacob Rodriguez – Fiber Designer
24700 Northwestern Hwy, Suite 700
Southfield, MI 48075
Phone: 866.460.3503
Phone (direct): 248.228.8263
Phone (cell): 734.334.7397

Comcast Business Communications, LLC:
Dale Kirk – VP of Engineering
41112 Concept Drive
Plymouth, MI 48170
Phone: 248.233.6811
Fax: 248.233-4875
Dale_kirk@cable.comcast.com

McLeodUSA, a Windstream Company:
Dirk Welte
4074 S. Linden
Flint, MI 48507
Phone: 810.691.1035
Dirk.welte@windstream.com

ExteNet Systems, Inc.:
3030 Warrensville Road, Suite 340
Lisle, IL 60532
Phone: 630.505.3800
Fax: 630.505.1332
David Schneider
152 Dansin
Milford Township, MI 48381
Phone: 734.536.3081
dschneider@extenetsystems.com

Verizon Wireless:
Jim Hart
Business Development and Strategic Planning
24242 Northwestern Highway
Southfield, MI 48075
248-315-3858
james.hart@verizonwireless.com

Windstream Communications, Inc.:
Autry L. Meeker – Sr. Analyst
OSP Engineering
11101 Anderson Drive
Little Rock, AR 72212
Phone: 501.748.5234
Autry.meeker@windstream.com

Wow! Internet and Cable:
John Hajec – Construction Engineer
37150 Plymouth Road
Livonia, MI 48150
Phone: 734.237-4319
Fax: 734.237.4608
j_hajec30@wideopenwest.com
www.wowway.com

Wow! Internet and Cable:
Bruce Roach – Field Contact
32650 N. Avis Dr.
Madison Heights, MI 48071
Phone: 586.453.3553
Fax: 248.677.9021
Bruce.Roach@wowinc.com
www.wowway.com

Know what's **below.**
Call before you dig.

0 15 30 60 90 120

B R i
Beckett&Raeder
Landscape Architecture
Planning, Engineering &
Environmental Services

Beckett & Raeder, Inc.
535 West William, Suite 101
Ann Arbor, MI 48103

734 663.2622 ph
734 663.6759 fx

Consultants

Seal

Project Title

Tooling and Equipment Int Foundry Addition

12550 and 12560 Tech Center Drive
Livonia, MI

Sheet Title

Soil Erosion and Sedimentation & Demolition Plan

Dates

Dates	Issued for
02.16.21	Owner Review
03.10.21	Owner Review
03.22.21	City Review
04.22.21	City Review

Scale

1" = 30'

Quality Control

Drawn:	AT
Checked:	KE
Approved:	KE

Project Number

2020.13

Sheet Number

C1.1

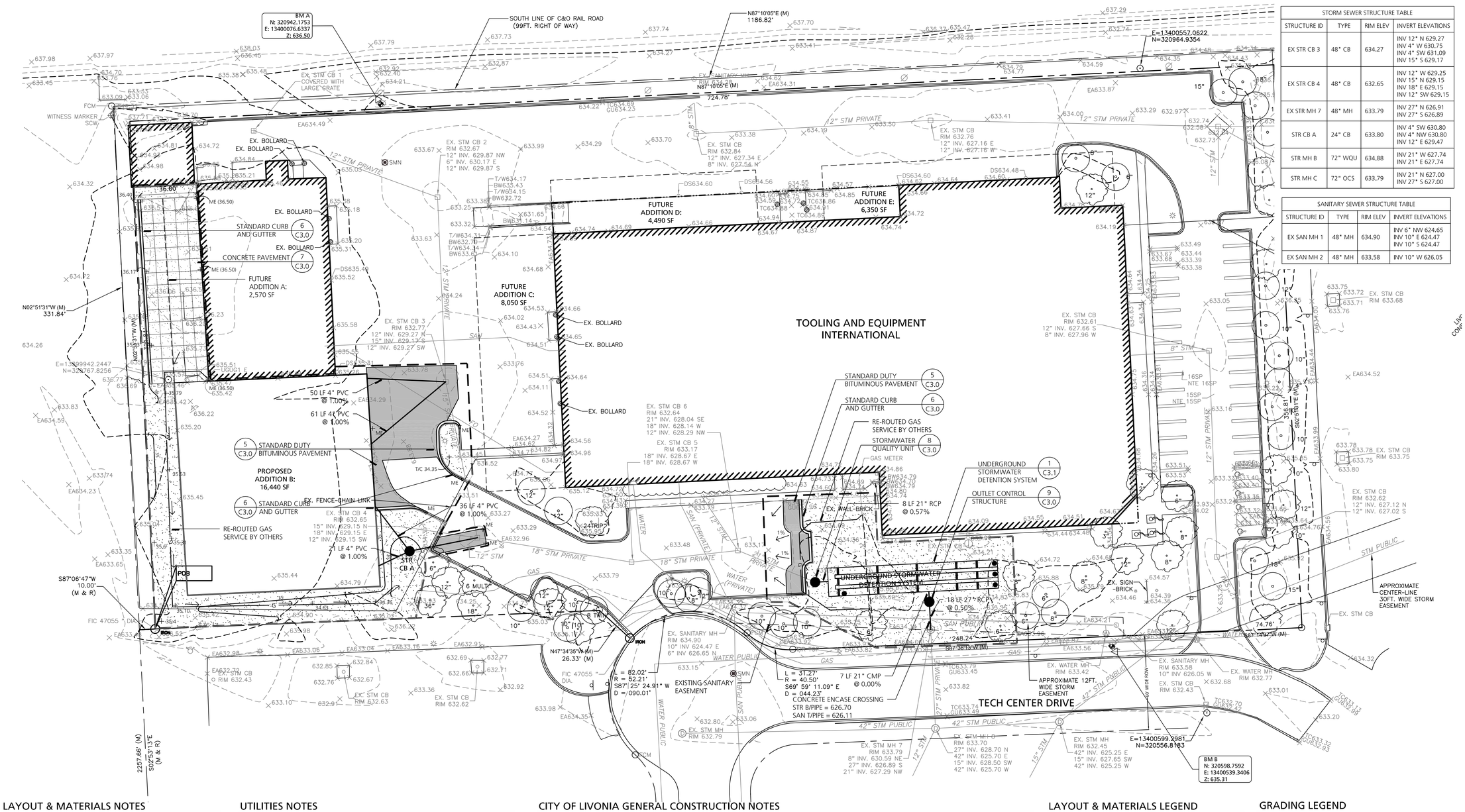

STORM SEWER STRUCTURE TABLE			
STRUCTURE ID	TYPE	RIM ELEV	INVERT ELEVATIONS
EX STR CB 3	48" CB	634.27	INV 12" N 629.27 INV 4" W 630.75 INV 4" SW 631.09 INV 15" S 629.17
EX STR CB 4	48" CB	632.65	INV 12" W 629.25 INV 15" N 629.15 INV 18" E 629.15 INV 12" SW 629.15
EX STR MH 7	48" MH	633.79	INV 27" N 626.91 INV 27" S 626.89
STR CB A	24" CB	633.80	INV 4" SW 630.80 INV 4" NW 630.80 INV 12" E 629.47
STR MH B	72" WQU	634.88	INV 21" W 627.74 INV 21" E 627.74
STR MH C	72" OCS	633.79	INV 21" N 627.00 INV 27" S 627.00

SANITARY SEWER STRUCTURE TABLE			
STRUCTURE ID	TYPE	RIM ELEV	INVERT ELEVATIONS
EX SAN MH 1	48" MH	634.90	INV 6" NW 624.65 INV 10" E 624.47 INV 10" S 624.47
EX SAN MH 2	48" MH	633.58	INV 10" W 626.05

LAYOUT & MATERIALS NOTES

1. ALL WORK SHALL BE COMPLETED IN CONFORMANCE WITH CURRENT ADA STANDARDS.
2. ALL DIMENSIONS ARE TO BACK OF CURB, FACE OF BUILDING OR EDGE OF MATERIAL UNLESS OTHERWISE NOTED.
3. ALL LINES ARE PARALLEL OR PERPENDICULAR TO THE CURB/ PAVEMENT/ BUILDING LINE FROM WHICH THEY ARE DIMENSIONED UNLESS OTHERWISE NOTED.
4. FOLLOWING LAYOUT OF ALL MATERIALS, CONTRACTOR SHALL REVIEW WITH OWNER'S REPRESENTATIVE.
5. ANY DISCREPANCIES IN THE LAYOUT PLAN SHOULD BE IMMEDIATELY REPORTED TO OWNER'S REPRESENTATIVE.
6. ALL DISTURBANCE ONTO THE ADJACENT PARCELS SHALL BE FULLY RESTORED WITHIN 15 DAYS AFTER THE WORK ON THE ADJACENT PARCELS HAS BEEN COMPLETED.
7. NORTHINGS AND EASTINGS ON THE PLAN HAVE BEEN TRUNCATED BY THE FOLLOWING: NORTHINGS: xxxx; EASTINGS: xxxxx

GRADING NOTES

1. CONTRACTOR IS RESPONSIBLE FOR CONSTRUCTION ALL WORK COMPLETED IN CONFORMANCE WITH CURRENT ADA STANDARDS.
2. PROPOSED CONTOUR LINES AND SPOT ELEVATIONS REFLECT FINISH GRADES. HOLD DOWN SUBGRADE ELEVATIONS ACCORDINGLY. ADJUST RIM ELEVATIONS OF ALL UTILITIES AFFECTED BY WORK IN THIS CONTRACT. CONTRACTOR SHALL ENSURE POSITIVE DRAINAGE ON THE SITE. ANY AREA THAT APPEARS TO NOT PROPERLY DRAIN SHALL BE BROUGHT TO THE IMMEDIATE ATTENTION OF THE LANDSCAPE ARCHITECT/ ENGINEER FOR RESOLUTION.

UTILITIES NOTES

1. ALL UTILITIES SHOWN FOR CONCEPTUAL DESIGN DEVELOPMENT ONLY. FINAL ROUTING, SIZING AND CONNECTIONS WILL VARY.
2. PROPOSED CONTOUR LINES AND SPOT ELEVATIONS REFLECT FINISH GRADES. HOLD DOWN SUBGRADE ELEVATIONS ACCORDINGLY. ADJUST RIM ELEVATIONS OF ALL UTILITIES AFFECTED BY WORK IN THIS CONTRACT. CONTRACTOR SHALL ENSURE POSITIVE DRAINAGE ON THE SITE. ANY AREA THAT APPEARS TO NOT PROPERLY DRAIN SHALL BE BROUGHT TO THE IMMEDIATE ATTENTION OF THE LANDSCAPE ARCHITECT/ ENGINEER FOR RESOLUTION.
3. CONTRACTOR SHALL VERIFY ALL EXISTING UTILITY LOCATIONS, DEPTHS AND ELEVATIONS PRIOR TO CONSTRUCTION. NO CHANGES IN CONTRACT PRICE WILL BE AWARDED FOR ACTUAL DISCREPANCIES IN UTILITY LOCATIONS DUE TO THE FAILURE TO VERIFY ACTUAL FIELD LOCATIONS.
4. THE CONTRACTOR SHALL RESTORE ALL AREAS DISTURBED BY HIS CONSTRUCTION OPERATIONS TO A CONDITION EQUAL TO OR BETTER THAN THAT EXISTING PRIOR TO CONSTRUCTION. THE CONTRACTOR SHALL CLEAN UP AND HAUL AWAY ALL CONSTRUCTION DEBRIS AND LITTER CAUSED BY HIS OPERATIONS.
5. CONTRACTOR SHALL PROTECT ALL EXISTING UTILITIES FROM DAMAGE DURING CONSTRUCTION. ANY DAMAGE INCURRED SHALL BE REPAIRED AT THE CONTRACTOR'S EXPENSE.
6. ALL UTILITY CROSSINGS SHALL HAVE A MINIMUM OF 18" VERTICAL CLEARANCE.
7. NO CONNECTION RECEIVING STORM WATER, SURFACE WATER OR GROUND WATER SHALL BE MADE TO THE SANITARY SEWER.
8. INFILTRATION FOR ANY SECTION OF SEWER BETWEEN MANHOLES SHALL NOT EXCEED 100 GALLONS/INCH DIAMETER/MILE/24 MILES/24 HOURS.
9. NO FOOTING DRAINS SHALL BE CONNECTED TO THE BUILDING SEWER.
10. CONTRACTOR SHALL NOTIFY THE CITY OF LIVONIA 48 HOURS PRIOR TO THE START OF CONSTRUCTION IF THE CONSTRUCTION IS WITH IN THE CITY'S RIGHT-OF-WAY OR EASEMENT.
11. PRIVATE STRUCTURES SHALL NOT CONTAIN THE CITY OF LIVONIA LOGO.
12. SEE ARCHITECTURAL AND MECHANICAL SHEETS FOR CONTINUATION OF UTILITIES WITHIN STRUCTURES.

CITY OF LIVONIA GENERAL CONSTRUCTION NOTES

1. ALL WORK AND MATERIALS SHALL BE IN ACCORDANCE WITH THE CURRENT SPECIFICATIONS AND STANDARD DETAILS OF THE CITY OF LIVONIA.
2. NOTIFY THE CITY OF LIVONIA ENGINEERING DIVISION (734) 466-2571 A MINIMUM OF 48 HOURS PRIOR TO THE START OF CONSTRUCTION.
3. CALL MISS DIG (1-800-647-7344/ 1-800-MISS DIG) A MINIMUM OF 72 HOURS PRIOR TO THE START OF CONSTRUCTION.
4. THE CONTRACTOR SHALL BE RESPONSIBLE FOR ANY AND ALL DAMAGES TO EXISTING UNDERGROUND UTILITIES CAUSED BY THE CONTRACTOR'S OPERATIONS.
5. TRENCHES UNDER OR WITHIN 3 FT. OF EXISTING OR PROPOSED PAVEMENTS, DRIVEWAYS, AND/OR SIDEWALKS SHALL BE BACKFILLED AND COMPACTED WITH M.D.O.T. CLASS II SAND.
6. WHERE UTILITIES CROSS, PROVIDE POROUS BACKFILL TAMPED IN 12" LAYERS TO THE UNDERSIDE OF THE HIGHER UTILITY. A 6" MINIMUM SAND CUSHION SHALL BE PROVIDED BETWEEN UTILITIES.
7. ALL SEWER CONSTRUCTION SHALL HAVE M.D.O.T. CLASS II BEDDING UNLESS OTHERWISE SPECIFIED ON THE PROFILES.
8. ALL ELEVATIONS SHOWN ARE BASED ON U.S.G.S. DATUM.
9. ALL DISTURBED AREAS BEHIND THE CURB WITHIN THE TECH CENTER DRIVE RIGHT-OF-WAY SHALL BE RESTORED BY PLACING 3" OF TOPSOIL AND SODDING IN ACCORDANCE WITH CITY OF LIVONIA STANDARDS.
10. ALL DRIVEWAYS, DRAIN TILES, CULVERTS AND OTHER FACILITIES REMOVED, DESTROYED, DAMAGED OR OTHERWISE DISTURBED BY THE WORK SHALL BE REPLACED AND/OR RESTORED TO THEIR ORIGINAL CONDITION BY THE CONTRACTOR.
11. ALL SOIL EROSION AND SEDIMENTATION MUST BE CONTROLLED AND CONTAINED ON SITE.
12. THE CONTRACTOR MUST MAINTAIN ALL TRAFFIC AT ALL TIMES AS REQUIRED BY THE CURRENT MICHIGAN MANUAL OF UNIFORM TRAFFIC CONTROL DEVICES (MMUTCD), WAYNE COUNTY, AND/OR MICHIGAN DEPARTMENT OF TRANSPORTATION (MDOT).
13. THE CONTRACTOR SHALL AT ALL TIMES PROVIDE EMERGENCY ACCESS TO ALL PROPERTIES FOR POLICE, FIRE DEPARTMENT, AMBULANCES AND/OR OTHER EMERGENCY VEHICLES TO PROTECT LIFE, HEALTH AND PROPERTY.
14. PAVED STREETS AND DRIVEWAYS MUST BE MAINTAINED IN A REASONABLE STATE OF CLEANLINESS AND THE CONTRACTOR SHALL REMOVE ACCUMULATIONS OF DEBRIS CAUSED BY CONSTRUCTION OPERATIONS.
15. THE CONTRACTOR SHALL HAVE AN OPERATING SWEEPER BROOM AND CLEAN THE PAVEMENT AT THE CLOSE OF EACH DAYS OPERATION AND AS OFTEN AS NECESSARY. FAILURE TO COMPLY SHALL BE CAUSE TO STOP CONSTRUCTION. CONTRACTOR SHALL COMPLY WITH THE STATE AIR POLLUTION CONTROL REGULATIONS AND CITY OF LIVONIA SOIL EROSION AND SEDIMENTATION CONTROL (SESC).
16. CONTRACTOR MUST PROVIDE ALL NECESSARY SHEETING, SHORING, DEWATERING, BRACING, TRENCH BOXES, ETC. TO PERFORM WORK SAFELY, PROTECT EXISTING UTILITIES AND IMPROVEMENTS IN ACCORDANCE TO MICHIGAN OCCUPATIONAL SAFETY AND HEALTH ADMINISTRATION (MIOSHA).

UTILITY LEGEND

- STR — PROPOSED STORM LINE
- G — PROPOSED GAS SERVICE
- ● PROPOSED MANHOLE/CATCH BASIN

LAYOUT & MATERIALS LEGEND

- PARCEL LINE
- RIGHT-OF-WAY LINE
- LIMIT OF DISTURBANCE
- EXISTING BUILDING / STRUCTURE
- CONCRETE CURB & GUTTER
- BITUMINOUS PAVEMENT
- HEAVY DUTY CONCRETE PAVEMENT (EXPANSION JOINT / CONTROL JOINT)
- EXISTING BUILDING OVERHANG

GRADING LEGEND

- 634.09 — EXISTING SPOT GRADE
- 880 — EXISTING MAJOR CONTOUR
- 878 — EXISTING MINOR CONTOUR
- 885 — PROPOSED MAJOR CONTOUR
- 888 — PROPOSED MINOR CONTOUR
- + ME — MATCH EXISTING GRADE
- + 80.84 — PROPOSED SPOT GRADE (+ 600)
- + TC 77.52 — PROPOSED TOP OF CURB GRADE (+ 600)
- + BC 77.02 — PROPOSED BOTTOM OF CURB GRADE (+ 600)
- + RIM 89.00 — PROPOSED RIM ELEVATION (+ 600)
- + INV 73.25 — PROPOSED INVERT ELEVATION (+ 600)

Know what's below. Call before you dig.

0 15 30 60 90 120

B R i
Beckett&Raeder
Landscape Architecture Planning, Engineering & Environmental Services

Beckett & Raeder, Inc.
535 West William, Suite 101
Ann Arbor, MI 48103

734 **663.2622** ph
734 **663.6759** fx

Consultants

Seal

Project Title

Tooling and Equipment Int Foundry Addition

12550 and 12560 Tech Center Drive
Livonia, MI

Sheet Title

Layout, Grading & Stormwater Management Plan

Dates

Dates	Issued for
02.16.21	Owner Review
03.10.21	Owner Review
03.22.21	City Review
04.22.21	City Review

Scale

1" = 30'

Quality Control

Drawn: AT
Checked: KE
Approved: KE

Project Number

2020.13

Sheet Number

C2.0

EXHIBIT "A"

PHYSICAL LIMITS OF STORM WATER MANAGEMENT SYSTEM



LOCATION MAP
N.T.S.

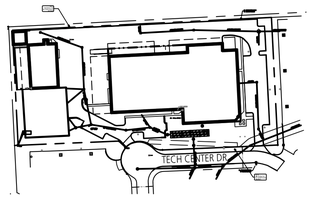

LEGEND

- PROPERTY LINE
- TOOLING AND EQUIPMENT INT UNDERGROUND DETENTION MAINTENACE RESPONSIBILITY
- TOOLING AND EQUIPMENT INT MAINTENANCE RESPONSIBILITY

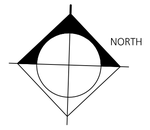

SCALE: 1/200" =1' 0"
20 APRIL 2021

LEGAL DESCRIPTION:

LAND IN THE CITY OF LIVONIA, COUNTY OF WAYNE, STATE OF MICHIGAN, DESCRIBED AS:

UNIT 5, LIVONIA TECH CENTER CONDOMINIUM

A PARCEL OF LAND SITUATED IN THE SOUTHEAST 1/4 OF SECTION 26, TOWN 1 SOUTH, RANGE 9 EAST, CITY OF LIVONIA, WAYNE COUNTY, MICHIGAN BEING PART OF A UNIT 5 REPLAT NO. 1 OF WAYNE COUNTY CONDOMINIUM SUBDIVISION PLAN NO. 331 DESCRIBED AS: BEGINNING AT A POINT DISTANT N00°26'43" WEST, 2257.92 FEET AND N89°33'17" EAST, 10.00 FEET FROM THE SOUTH 1/4 CORNER OF SECTION 26 SAID POINT BEING A CORNER OF UNIT 3 OF THE REPLAT NO. 1 OF THE CONDOMINIUM PLAND AND PROCEEDING THENCE N 00°26'43" W, 321.81 FEET; THENCE N 89°34'53", 724.78 FEET; THENCE S 00°26'43" E, 356.81 FEET TO A POINT ON THE RIGHT-OF-WAY LINE OF TECH CENTER DRIVE; THENCE S 89°39'25" WEST 74.75 FEET; THENCE N 89°58'59" WEST, 248.25 FEET; THENCE 31.29 FEET ALONG THE ARC OF A CURVE CONCAVE TO THE NORTH WITH A RADIUS OF 40.00 FEET, A CENTRAL ANGLE OF 44°49'12" AND A CHORD OF 30.50 FEET BEARING N 67°34'23" WEST; THENCE 82.01 FEET ALONG THE ARC OF A CURVE CONCAVE TO THE SOUTH WITH A RADIUS OF 52.21 FEET A CENTRAL ANGLE OF 90°00'00" A CHORD OF 73.84 FEET BEARING S 89°50'13" W; THENCE N 45°09'47" W, 26.33 FEET; THENCE N 89°58'59" W, 281.33 FEET TO THE POINT OF BEGINNING. CONTAINING 5.656 ACRES MORE OR LESS.

PROPERTY INFORMATION:	PROPERTY OWNER:	ENGINEER:	DATE: 04/20/2021
Tooling and Equipment Int Foundry Addition 12550 and 12560 Tech Center Drive Livonia, MI 48150-2192	Oliver Johnson, President (734) 522-1422	Beckett & Raeder Inc. 535 W. William St. #101 Ann Arbor, MI 48103 Phone: (734) 662-2622	SHEET: 1 OF 2

EXHIBIT "B"- STORM WATER MANAGEMENT SYSTEM LONG-TERM MAINTENANCE PLAN

A. Physical Limits of the Storm Water Management System

The storm water management system (SWMS) subject to this long-term maintenance plan (Plan) is depicted on Exhibit A to the permit and includes without limitation the storm sewers, catch basins, and vegetated swales that convey flows to the underground detention system. For the purposes of this plan, this storm water management system (SWMS) and all of its components as shown in Exhibit A is referred to as "Tooling Equipment Int".

B. Time Frame for Long-Term Maintenance Responsibility

Tooling Equipment Int is responsible for maintaining the Tooling Equipment Int SWMS, including complying with applicable requirements of the City of Livonia soil erosion and sedimentation control program until the City of Livonia releases the construction permit. Long-term maintenance responsibility for the Tooling Equipment Int SWMS commences when defined by the maintenance permit issued by the City. Long-term maintenance continues in perpetuity.

C. Manner of Insuring Maintenance Responsibility

The City of Livonia has assumed responsibility for long-term maintenance of Tooling and Equipment Int SWMS. The Tooling Equipment Int, through a maintenance agreement with the City of Livonia, has agreed to perform the maintenance activities required by this plan. The City of Livonia retains the right to enter the property and perform the necessary maintenance of the Tooling Equipment Int SWMS if the Tooling Equipment and Int fails to perform the required maintenance activities. To ensure that the Tooling Equipment Int SWMS is maintained in perpetuity, the map of the physical limits of the storm water management system (Exhibit A), this plan (Exhibit B), and the maintenance agreement between the City of Livonia and the property owner will be recorded with the Wayne County Register of Deeds.

D. Long-Term Maintenance Plan and Schedule

Table 1 identifies the maintenance activities to be performed, organized by category (monitoring/inspections, preventative maintenance maintenance and remedial actions). While performing maintenance, chemicals should not be applied to the forebay, detention basin, buffer strip, or watercourses. Table 1 also identifies site-specific work needed to ensure that the storm water management system functions properly as designed.

MAINTENANCE ACTIVITIES	SYSTEM COMPONENTS Storm Collection System (Inlets, Catch Basins, Vegetated Swales, etc)	Storm water Treatment Devices	Underground Detention	Pavement Areas, Others,			FREQUENCY
Monitoring/Inspection							
Inspect for Sediment Acumulation	X	X	X				Annually
Inspect for Floatables, Dead Vegetation & Debris	X	X	X				Annually & After Major Events
Inspect for Erosion And Integrity of Banks & Berms	X		X				Annually & After Major Events
Monitor Plantings/Vegetation			X				2 Times per Year
Inspect All Components During Wet Weather & Compare to As-Built Plans	X	X	X	X			Annually
Ensure Maintenance Access Remain Open/Clear	X	X	X	X			Annually
Preventative Maintenance							
Mowing			X				As Needed, select areas only*
Remove Accumulated sediments	X	X	X				As Needed
Remove Floatables, Debris, Invasive & Dead Vegetation	X	X	X				As Needed
Re-Apply/Replace Mulch Layer							Re-apply every 6 Months, Replace every 2 years
Replace Bioretention Subsurface components							Every 5 years / or if water ponds > 6 hours
Sweeping of Paved Surfaces, Others				X			As Needed
Remedial Actions							
Repair/Stabilize Areas of Erosion	X		X				As Needed
Replace Dead Plantings and Trees, Reseed Bare Areas			X				As Needed
Structural Repairs	X	X					As Needed
Make Adjustments/Repairs to Ensure Proper Functioning	X	X	X	X			As Needed

NOTES: *Not to exceed the length allowed by local community ordinance.

PROPERTY INFORMATION:	PROPERTY OWNER:	ENGINEER:	DATE: 04/20/2021
Tooling and Equipment Int Foundry Addition 12550 and 12560 Tech Center Drive Livonia, MI 48150-2192	Oliver Johnson, President (734) 522-1422	Beckett & Raeder Inc. 535 W. William St. #101 Ann Arbor, MI 48103 Phone: (734) 662-2622	SHEET: 2 OF 2

B R i
Beckett&Raeder
Landscape Architecture
Planning, Engineering &
Environmental Services

Beckett & Raeder, Inc.
535 West William, Suite 101
Ann Arbor, MI 48103

734 **663.2622** ph
734 **663.6759** fx

Consultants

Seal

Project Title

Tooling and Equipment Int
Foundry Addition

12550 and 12560 Tech Center Drive
Livonia, MI

Sheet Title

SW Exhibits

Dates

Dates	Issued for
02.16.21	Owner Review
03.10.21	Owner Review
03.22.21	City Review
04.22.21	City Review

Scale

1" = 30'

Quality Control

Drawn:	AT
Checked:	KE
Approved:	KE

Project Number

2020.13

Sheet Number

C2.1

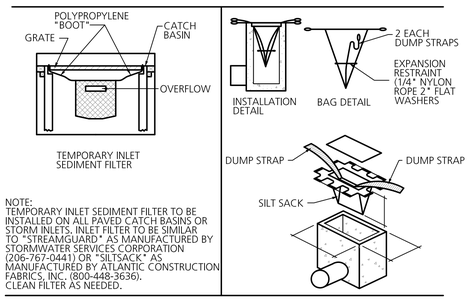

1 Inlet Filter
NO SCALE

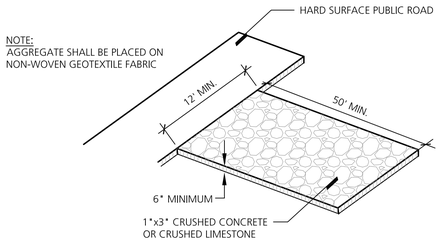

2 Construction Access Drive
NO SCALE

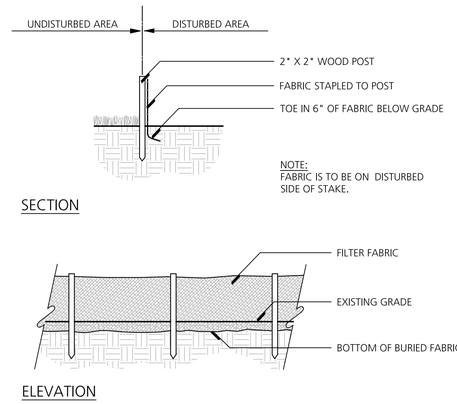

3 Filter Fabric Fence
NO SCALE

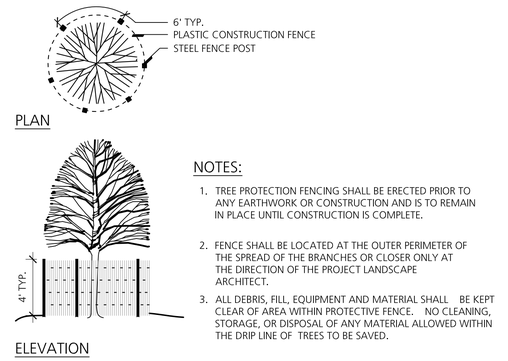

4 Tree Protection Fence
NO SCALE

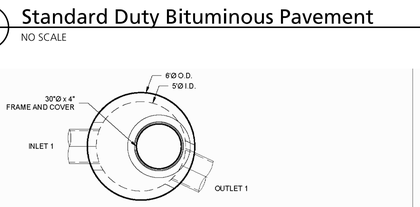

5 Standard Duty Bituminous Pavement
NO SCALE

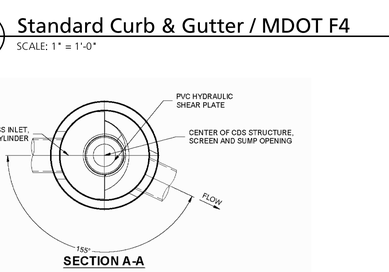

6 Standard Curb & Gutter / MDOT F4
SCALE: 1" = 1'-0"

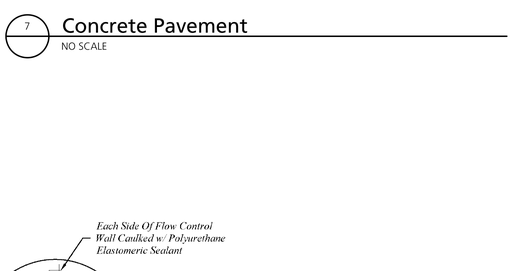

7 Concrete Pavement
NO SCALE

MATERIAL LIST (PROVIDED BY CONTECH)

COUNT	DESCRIPTION	INSTALLED BY
1	FIBERGLASS INLET AND CYLINDER	CONTECH
1	2400 micron, 2' O.D. x 2.25' SEP. SCREEN	CONTECH
1	3/16 INCH PVC HYDRAULIC SHEAR PLATE *	CONTECH
1	SEALANT FOR JOINTS	CONTRACTOR
1	30"Ø x 4" FRAME & COVER, EJ#41600484, OR EQUIV.	CONTRACTOR

* SEE HYDRAULIC SHEAR PLATE DETAIL

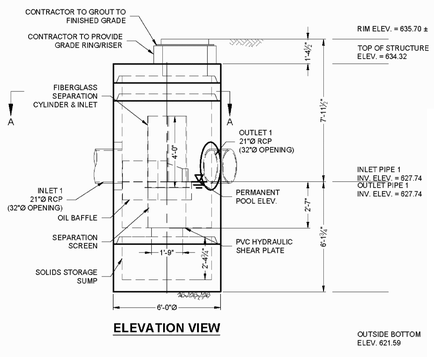

8 Stormwater Quality Unit
NO SCALE

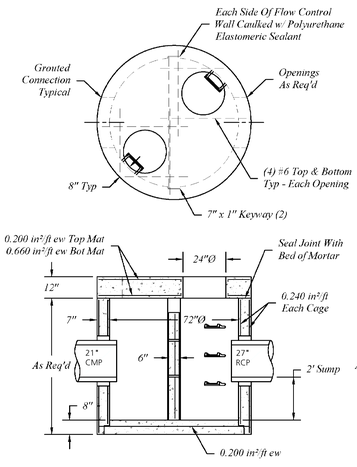

9 72" Diameter Precast Outlet Control Structure w/Overflow
NO SCALE

Underground Detention System Design

The stormwater management system is designed to mitigate the proposed increase and proposed future increase in impervious area:

Addition A (future)	2,750	sf		
Addition B (proposed)	16,440	sf		
Addition C (future)	8,050	sf		
Addition D (future)	4,490	sf		
Addition E (future)	6,350	sf		
New Pavement	4,800	sf		
Acres	0.98			
Frontage	436		Bottom of Storage	627.00
C-Value	0.95		Invert of Outlet	627.00
Required Volume				
Qa=0.15cfs/ac			0.148	cfs
OR				
Qa=0.103cfsx400' of frontage/100			0.449	cfs
Qc=Qa/(AxC)			0.158	cfs/ac
T10=-19.9+(4530/Qo)^0.5			149.5	minutes
Vs=(9,108*T10)/(T10+19.9)-40xQoxT10			7,157	cubic feet
Vtotal=Vs*A*C			6,693	cubic feet
Vbf=5160xAxC			4,825	cubic feet
Storage Provided				
Pipe Size			54	inch
Area			15.89625	sft
Header Length			18	ft
No. of Headers			1	ea
Run Length			107.5	ft
No. of Runs			3	ea
Stone Length			110.5	ft
Stone Width			21.5	ft
Stone Depth			4.5	ft
Stone Porosity			25	%
Volume			**6,732**	cft OK
Abf=Vbf/Length			14.17	sft
Bankfull Water Depth			3.10	ft
Bankfull Elevation			630.10	
A1C=V10/Length			19.66	sft
Water Depth			4.45	ft
Water Storage Elevation			631.45	
Bankfull Flood Flow Restrictor				
Qavgbf=Vbf/144,000			0.034	cfs
havg=0.5(2bf-Zo)+(Zo-Zout)			1.55	ft
Ac=Qavgbf/(0.62x(2xgxhavg)^0.5)			0.00541	sft
Do=	1.00	in	0.00545	sft
Number of Holes			0.99	holes
Number of Holes			1.00	holes
at Elevation			627.00	
Qavbf=0.62xAoxC(2xgxhavg)^0.5			0.034	cfs
Tb=Vbf/(Qavgbf*3600)			39.69	hours
Qmax=Qa			0.148	cfs
hmax=Z10-Zo+(Zo-Zout)			4.45	ft
Qmaxbf=0.62xholesxDoxC(2xgxhmax)^0.5			0.057	cfs
Need more holes				
Qmax adjusted			0.090	cfs
hmax adjusted=h10-hbf			1.35	ft
Ac=Qmaxadj/(0.62x(2xgxhmaxadj)^0.5)			0.015645	sft
Do=	0.75	in	0.00307	sft
Number of Holes			5.10	holes
Use Number of Holes			5.00	holes
at Elevation			630.10	
Qact=Qmaxbf+0.62xAox(2xgxhmaxadj)^0.5			0.146	cfs
Conversion cfs to gpm			66	gpm
Tolerance			1%	

10 Underground Detention System Calculations
NO SCALE

B R i
Beckett&Raeder
Landscape Architecture Planning, Engineering & Environmental Services

Beckett & Raeder, Inc.
535 West William, Suite 101
Ann Arbor, MI 48103

734 663.2622 ph
734 663.6759 fx

Consultants

Seal

Project Title

Tooling and Equipment Int
Foundry Addition

12550 and 12560 Tech Center Drive
Livonia, MI

Sheet Title

Details

Dates

Dates	Issued for
02.16.21	Owner Review
03.10.21	Owner Review
03.22.21	City Review
04.22.21	City Review

Scale

1" = 30'

Quality Control

Drawn: AT
Checked: KE
Approved: KE

Project Number

2020.13

Sheet Number

C3.0

NORTH ARROW PROVIDED FOR REFERENCE ONLY. REFER TO ENGINEERED SITE PLANS FOR EXACT LOCATION AND ORIENTATION

RISER INFORMATION		
PIECE	RIM ELEV.	SYSTEM INVERT
30"Ø RISER B1	635.65	627.00
6"Ø RISER D2	635.65	627.00
6"Ø RISER E2	635.65	627.00
6"Ø RISER F2	635.65	627.00

STUB INFORMATION		
PIECE	STUB INVERT	SYSTEM INVERT
30"Ø STUB A1	627.58	627.00
30"Ø STUB C1	627.00	627.00

STUBS OVERSIZED FOR RCP CONNECTION

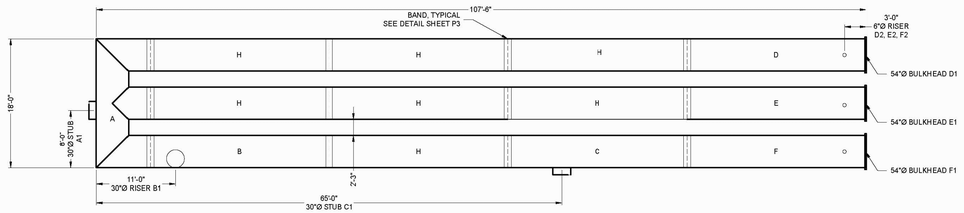

THE UNDERSIGNED HEREBY APPROVES THE ATTACHED (5) PAGES INCLUDING THE FOLLOWING:

- **PIPE STORAGE = 5,201 CF**
- **MAINLINE PIPE GAGE = 14**
- **WALL TYPE = PERFORATED**
- **DIAMETER = 54"**
- **FINISH = ALT2**
- **CORRUGATION = 5x1**

CUSTOMER _____ DATE _____

ASSEMBLY
SCALE: 1" = 10'
PIPE STORAGE: 5,201 CF
STRUCTURAL BACKFILL STORAGE: 1,535 CF
TOTAL STORAGE PROVIDED: 6,736 CF
LOADING: H20
PIPE INV. = 627.00'±

NOTES

- ALL RISER AND STUB DIMENSIONS ARE TO CENTERLINE.
- ALL ELEVATIONS, DIMENSIONS, AND LOCATIONS OF RISERS AND INLETS, SHALL BE VERIFIED BY THE ENGINEER OF RECORD (EOR) PRIOR TO RELEASING FOR FABRICATION.
- ALL FITTINGS AND REINFORCEMENT COMPLY WITH ASTM A998.
- ALL RISERS AND STUBS ARE 2⅔" x ½" CORRUGATION AND 16 GAGE UNLESS OTHERWISE NOTED.
- RISERS TO BE FIELD TRIMMED TO GRADE AS REQUIRED, BY CONTRACTOR.
- QUANTITY OF PIPE SHOWN DOES NOT PROVIDE EXTRA PIPE FOR CONNECTING THE SYSTEM TO EXISTING PIPE OR DRAINAGE STRUCTURES. OUR SYSTEM AS DETAILED PROVIDES NOMINAL INLET AND/OR OUTLET PIPE STUB FOR CONNECTION TO EXISTING DRAINAGE FACILITIES. IF ADDITIONAL PIPE IS NEEDED IT IS THE RESPONSIBILITY OF THE CONTRACTOR.
- ALL ACCESS CASTINGS ARE THE RESPONSIBILITY OF THE CONTRACTOR AND ARE NOT SUPPLIED BY CONTECH.
- THIS CONTECH CMP PIPE DESIGN SUBMITTAL PACKAGE IS NOT APPLICABLE TO AND SHALL NOT BE USED BY OTHER MANUFACTURERS, AS IT IS THE PROPERTY OF CONTECH ENGINEERED SOLUTIONS LLC. FABRICATION DRAWINGS, PERFORATION DETAILS, MANUFACTURING PROCEDURES, AND FIELD OPERATIONS ARE SPECIFIC TO CONTECH'S CMP PRODUCT AND ARE NOT TO BE DUPLICATED.
- RISERS ARE TO BE MANUFACTURED 12" BELOW GRADE AND INTERIOR TO BE PAINTED WITH ZINC RICH PAINT UNLESS OTHERWISE NOTED.
- DUE TO SALTING AGENTS FOR SNOW AND ICE REMOVAL, ALL CMP WILL BE REQUIRED TO HAVE PE LINER AND/OR GEOMEMBRANE AS INDICATED ON SHEET P2 OR C2. THIS NOTE SUPERCEDES ANY OTHER RECOMMENDATIONS ON THIS TOPIC WITHIN THIS SUBMITTAL.

1 54" Perforated Underground Retention System - 1
NO SCALE

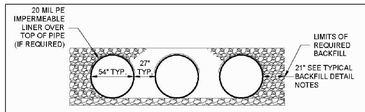

TYPICAL SECTION VIEW
NOT TO SCALE

NOTE: IF SALTING AGENTS FOR SNOW AND ICE REMOVAL ARE USED ON OR NEAR THE PROJECT, A GEOMEMBRANE BARRIER IS RECOMMENDED WITH THE SYSTEM. THE GEOMEMBRANE LINER IS INTENDED TO HELP PROTECT THE SYSTEM FROM THE POTENTIAL ADVERSE EFFECTS THAT MAY RESULT FROM A CHANGE IN THE SURROUNDING ENVIRONMENT OVER A PERIOD OF TIME. PLEASE REFER TO THE CORRUGATED METAL PIPE DETENTION DESIGN GUIDE FOR ADDITIONAL INFORMATION.

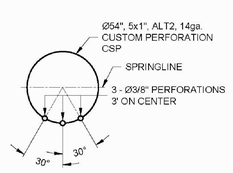

PERFORATION DETAIL
SCALE: N.T.S.

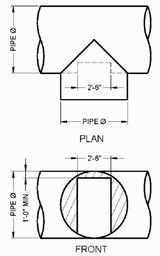

48"Ø to 60"Ø FITTING REINFORCEMENT MAY BE REQUIRED BASED ON HEIGHT OF COVER AND LIVE LOAD CONDITION

TYPICAL MANWAY DETAIL
NOT TO SCALE

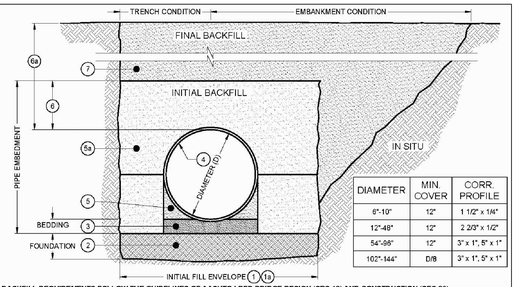

DIAMETER	MIN. COVER	CORR. PROFILE
6'-10"	12"	1 1/2" x 1/4"
12"-48"	12"	2 2/3" x 1/2"
54"-96"	12"	3" x 1", 5" x 1"
102"-144"	D/8	3" x 1", 5" x 1"

BACKFILL REQUIREMENTS FOLLOW THE GUIDELINES OF AASHTO LRFD BRIDGE DESIGN (SEC 12) AND CONSTRUCTION (SEC 26)

1 MINIMUM TRENCH WIDTH MUST ALLOW ROOM FOR PROPER COMPACTION OF HAUNCH MATERIALS UNDER THE PIPE.
THE MINIMUM TRENCH WIDTH (12.6.6.1):
PIPE ≤ 12": D + 16"
PIPE > 12": 1.5D + 12"

1a MINIMUM EMBANKMENT WIDTH (IN FEET) FOR INITIAL FILL ENVELOPE (12.6.6.2):
PIPE < 24": 3.0D
PIPE 24" - 144": D + 4'0"
PIPE > 144": D + 10'0"

2 THE FOUNDATION UNDER THE PIPE AND SIDE BACKFILL SHALL BE ADEQUATE TO SUPPORT THE LOADS ACTING UPON IT (26.5.2).

3 BEDDING MATERIAL SHALL BE A RELATIVELY LOOSE GRANULAR MATERIAL THAT IS ROUGHLY SHAPED TO FIT THE BOTTOM OF THE PIPE, AND A MINIMUM OF TWICE THE CORRUGATION DEPTH IN THICKNESS, WITH THE MAXIMUM PARTICLE SIZE OF ONE-HALF OF THE CORRUGATION DEPTH (26.3.8.1, 26.5.3).

4 PERFORATED CORRUGATED STEEL PIPE (CSP / HEL-COR).

5 HAUNCH ZONE MATERIAL SHALL BE HAND SHOVELED OR SHOVEL SLICED INTO PLACE TO ALLOW FOR PROPER COMPACTION (26.5.4).

5a INITIAL BACKFILL FOR PIPE EMBEDMENT TO BE FREE DRAINING ANGULAR WASHED STONE 1/2" - 3" PARTICLE SIZE (WITH NO FINES AND NO CRUSHED CONCRETE) SUCH AS MDOT 6AA, MDOT 6A, MDOT 6AA OR APPROVED EQUAL, COMPACTED TO 95% STANDARD PROCTOR (T 99). ALL LIFTS PLACED IN A CONTROLLED MANNER. IT IS RECOMMENDED THAT LIFTS NOT EXCEED AN 8" UNCOMPACTED LIFT HEIGHT TO PREVENT UNEVEN LOADING, AND THE LESSER OF 1/3 THE DIAMETER OR 24" AS THE MAXIMUM DIFFERENTIAL SIDE-TO-SIDE (26.5.4).

6 INITIAL BACKFILL ABOVE PIPE MAY INCLUDE ROAD BASE MATERIAL (AND RIGID PAVEMENT IF APPLICABLE). SEE TABLE ABOVE.

6a TOTAL HEIGHT OF COMPACTED COVER FOR CONVENTIONAL HIGHWAY LOADS IS MEASURED FROM TOP OF PIPE TO BOTTOM OF FLEXIBLE PAVEMENT OR TOP OF RIGID PAVEMENT (12.6.6.3).

7 FINAL BACKFILL MATERIAL SELECTION AND COMPACTION REQUIREMENTS SHALL FOLLOW THE PROJECT PLANS AND SPECIFICATIONS PER THE ENGINEER OF RECORD (26.5.4.1).

NOTES:
- GEOTEXTILE SHALL BE USED TO WRAP TRENCH ONLY TO PREVENT SOIL MIGRATION INTO VARYING SOIL TYPES (PROJECT ENGINEER).
- FOR MULTIPLE BARREL INSTALLATIONS THE RECOMMENDED STANDARD SPACING BETWEEN PARALLEL PIPE RUNS SHALL BE PIPE DIA./2 BUT NO LESS THAN 12", OR 36" FOR PIPE DIAMETERS 72" AND LARGER. CONTACT YOUR CONTECH REPRESENTATIVE FOR NONSTANDARD SPACING (TABLE C12.6.7-1).

TYPICAL BACKFILL DETAIL
NOT TO SCALE

2 54" Perforated Underground Retention System - 2
NO SCALE

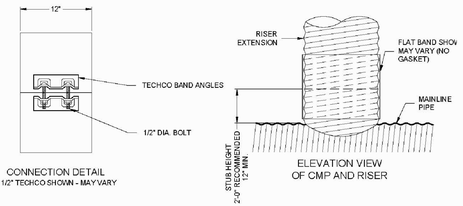

CONNECTION DETAIL
7 1/2" TECHCO SHOWN - MAY VARY

ELEVATION VIEW OF CMP AND RISER

PLAIN END CMP RISER PIPE

GENERAL NOTES:

1. **DELIVERED BAND STYLE AND FASTENER TYPE MAY VARY BY FABRICATION PLANT.**
2. JOINT IS TO BE ASSEMBLED PER AASHTO BRIDGE CONSTRUCTION SPECIFICATION SEC 26.4.2.4.
3. BAND MATERIAL AND GAGE TO BE SAME AS RISER MATERIAL.
4. IF RISER HAS A HEIGHT OF COVER OF 10' OR MORE, USE A SLIP JOINT.
5. BANDS ARE NORMALLY FURNISHED AS FOLLOWS:
   - 12" THRU 48" 1-PIECE
   - 54" 2-PIECES
6. ALL RISER JOINT COMPONENTS WILL BE FIELD ASSEMBLED.
7. MANHOLE RISERS IN APPLICATIONS WHERE TRAFFIC LOADS ARE IMPOSED REQUIRE SPECIAL DESIGN CONSIDERATIONS.
8. DIMENSIONS SUBJECT TO MANUFACTURING TOLERANCES.

12" RISER BAND DETAIL
NOT TO SCALE

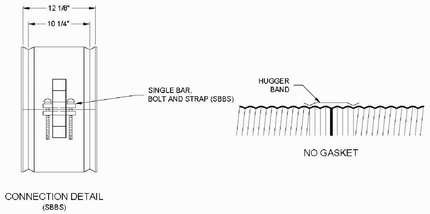

CONNECTION DETAIL
(SBBS)

2 2/3"x1/2" RE-ROLLED END HEL-COR PIPE

GENERAL NOTES:

1. JOINT IS TO BE ASSEMBLED PER AASHTO BRIDGE CONSTRUCTION SPECIFICATION SEC 26.4.2.4.
2. BAND MATERIALS AND/OR COATING CAN VARY BY LOCATION. CONTACT YOUR CONTECH REPRESENTATIVE FOR AVAILABILITY.
3. BANDS ARE SHAPED TO MATCH THE PIPE-ARCH WHEN APPLICABLE.
4. BANDS ARE NORMALLY FURNISHED AS FOLLOWS:
   - 12" THRU 48" 1-PIECE
   - 54" THRU 96" 2-PIECES
   - 102" THRU 144" 3-PIECES
5. BAND FASTENERS ARE ATTACHED WITH SPOT WELDS, RIVETS OR HAND WELDS.
6. ALL CMP IS REROLLED TO HAVE ANNULAR END CORRUGATIONS OF 2 2/3"x1/2"
7. DIMENSIONS ARE SUBJECT TO MANUFACTURING TOLERANCES.
8. ORDER SHALL DESIGNATE GASKET OPTION, IF REQUIRED (SEE DETAILS ABOVE).

H-12 HUGGER BAND DETAIL
NOT TO SCALE

3 54" Perforated Underground Retention System - 3
NO SCALE

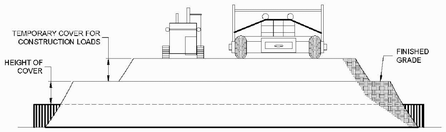

CONSTRUCTION LOADS

FOR TEMPORARY CONSTRUCTION VEHICLE LOADS, AN EXTRA AMOUNT OF COMPACTED COVER MAY BE REQUIRED OVER THE TOP OF THE PIPE. THE HEIGHT-OF-COVER SHALL MEET THE MINIMUM REQUIREMENTS SHOWN IN THE TABLE BELOW. THE USE OF HEAVY CONSTRUCTION EQUIPMENT NECESSITATES GREATER PROTECTION FOR THE PIPE THAN FINISHED GRADE COVER MINIMUMS FOR NORMAL HIGHWAY TRAFFIC.

PIPE SPAN, INCHES	AXLE LOADS (kips)			
	18-50	50-75	75-110	110-150
	MINIMUM COVER (FT)			
12-42	2.0	2.5	3.0	3.0
48-72	3.0	3.0	3.5	4.0
78-120	3.0	3.5	4.0	4.0
126-144	3.5	4.0	4.5	4.5

*MINIMUM COVER MAY VARY, DEPENDING ON LOCAL CONDITIONS. THE CONTRACTOR MUST PROVIDE THE ADDITIONAL COVER REQUIRED TO AVOID DAMAGE TO THE PIPE. MINIMUM COVER IS MEASURED FROM THE TOP OF THE PIPE TO THE TOP OF THE MAINTAINED CONSTRUCTION ROADWAY SURFACE.

CONSTRUCTION LOADING DIAGRAM
NOT TO SCALE

SPECIFICATION FOR CORRUGATED STEEL PIPE-ALUMINIZED TYPE 2 STEEL

SCOPE

THIS SPECIFICATION COVERS THE MANUFACTURE AND INSTALLATION OF THE CORRUGATED STEEL PIPE (CSP) DETAILED IN THE PROJECT PLANS.

MATERIAL

THE ALUMINIZED TYPE 2 STEEL COILS SHALL CONFORM TO THE APPLICABLE REQUIREMENTS OF AASHTO M274 OR ASTM A929.

PIPE

THE CSP SHALL BE MANUFACTURED IN ACCORDANCE WITH THE APPLICABLE REQUIREMENTS OF AASHTO M36 OR ASTM A760. THE PIPE SIZES, GAGES AND CORRUGATIONS SHALL BE AS SHOWN ON THE PROJECT PLANS.

ALL FABRICATION OF THE PRODUCT SHALL OCCUR WITHIN THE UNITED STATES.

HANDLING AND ASSEMBLY

SHALL BE IN ACCORDANCE WITH RECOMMENDATIONS OF THE NATIONAL CORRUGATED STEEL PIPE ASSOCIATION (NCSPA)

INSTALLATION

SHALL BE IN ACCORDANCE WITH AASHTO STANDARD SPECIFICATIONS FOR HIGHWAY BRIDGES, SECTION 26, DIVISION II OR ASTM A798 AND IN CONFORMANCE WITH THE PROJECT PLANS AND SPECIFICATIONS. IF THERE ARE ANY INCONSISTENCIES OR CONFLICTS THE CONTRACTOR SHOULD DISCUSS AND RESOLVE WITH THE SITE ENGINEER.

IT IS ALWAYS THE RESPONSIBILITY OF THE CONTRACTOR TO FOLLOW OSHA GUIDELINES FOR SAFE PRACTICES.

MATERIAL SPECIFICATION
NOT TO SCALE

ACCESS CASTING NOT SUPPLIED BY CONTECH

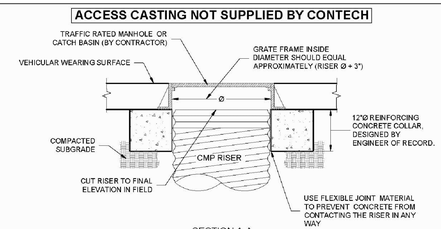

SECTION A-A

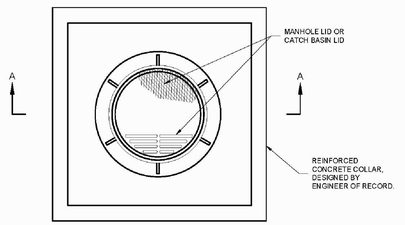

PLAN VIEW

NOTES:

1. REINFORCED CONCRETE COLLAR SHALL BE SIZED AND DESIGNED BY ENGINEER OF RECORD SO THAT THE LOADS ARE TRANSMITTED TO THE SOIL, AND NOT THE RISER.
2. REINFORCED CONCRETE COLLAR SHALL BE SIZED TO PROVIDE AN ADEQUATE BOTTOM AREA BASED ON THE ALLOWABLE BEARING CAPACITY OF THE SOIL.
3. THE FLEXIBLE JOINT MATERIAL (RECYCLED VINYL OR EQUIVALENT) TO BE STIFF ENOUGH SO THAT THE CONCRETE CAN NEVER ENGAGE WITH THE RISER CORRUGATIONS.

MANHOLE CAP DETAIL
NOT TO SCALE

4 54" Perforated Underground Retention System - 4
NO SCALE

B R i
Beckett&Raeder
Landscape Architecture Planning, Engineering & Environmental Services

Beckett & Raeder, Inc.
535 West William, Suite 101
Ann Arbor, MI 48103

734 663.2622 ph
734 663.6759 fx

Consultants

Seal

Project Title

Tooling and Equipment Int
Foundry Addition

12550 and 12560 Tech Center Drive
Livonia, MI

Sheet Title

Details

Dates

Dates	Issued for
02.16.21	Owner Review
03.10.21	Owner Review
03.22.21	City Review
04.22.21	City Review

Scale

1" = 30'

Quality Control

Drawn: AT
Checked: KE
Approved: KE

Project Number

2020.13

Sheet Number

C3.1

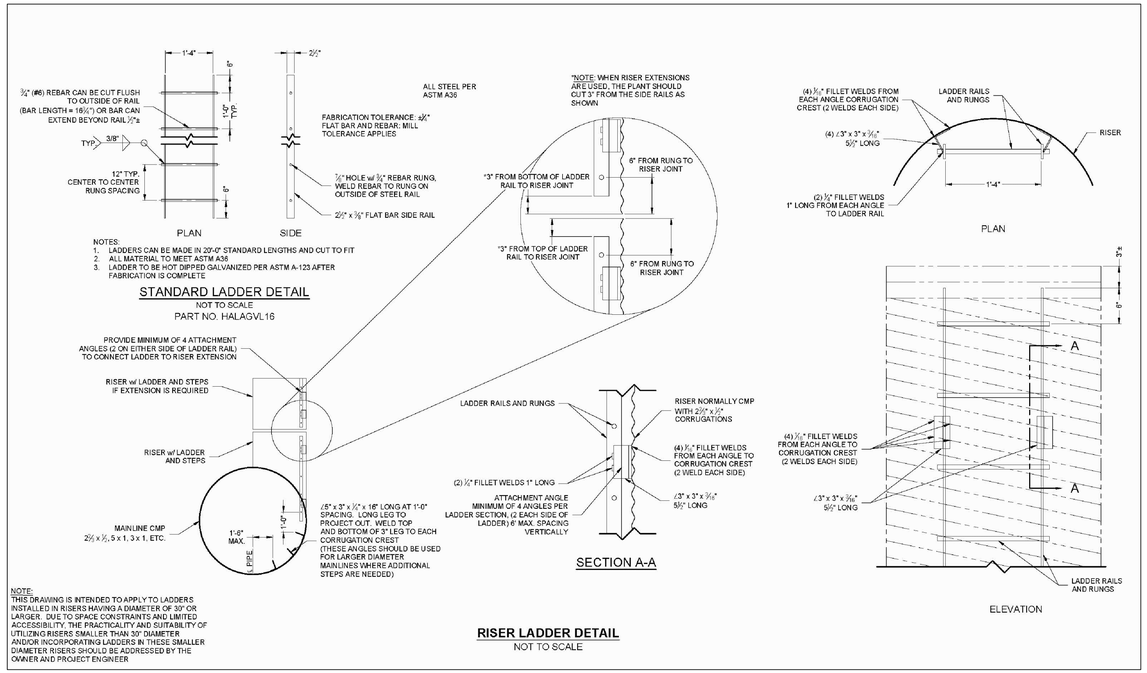

1 54" Perforated Underground Retention System - 5

NO SCALE

B R i
Beckett&Raeder
Landscape Architecture Planning, Engineering & Environmental Services

Beckett & Raeder, Inc.
535 West William, Suite 101
Ann Arbor, MI 48103

734 663.2622 ph
734 663.6759 fx

Consultants

Seal

Project Title

Tooling and Equipment Int Foundry Addition

12550 and 12560 Tech Center Drive
Livonia, MI

Sheet Title

Details

Dates

Dates	Issued for
02.16.21	Owner Review
03.10.21	Owner Review
03.22.21	City Review
04.22.21	City Review

Scale

1" = 30'

Quality Control

Drawn:	AT
Checked:	KE
Approved:	KE

Project Number

2020.13

Sheet Number

C3.2

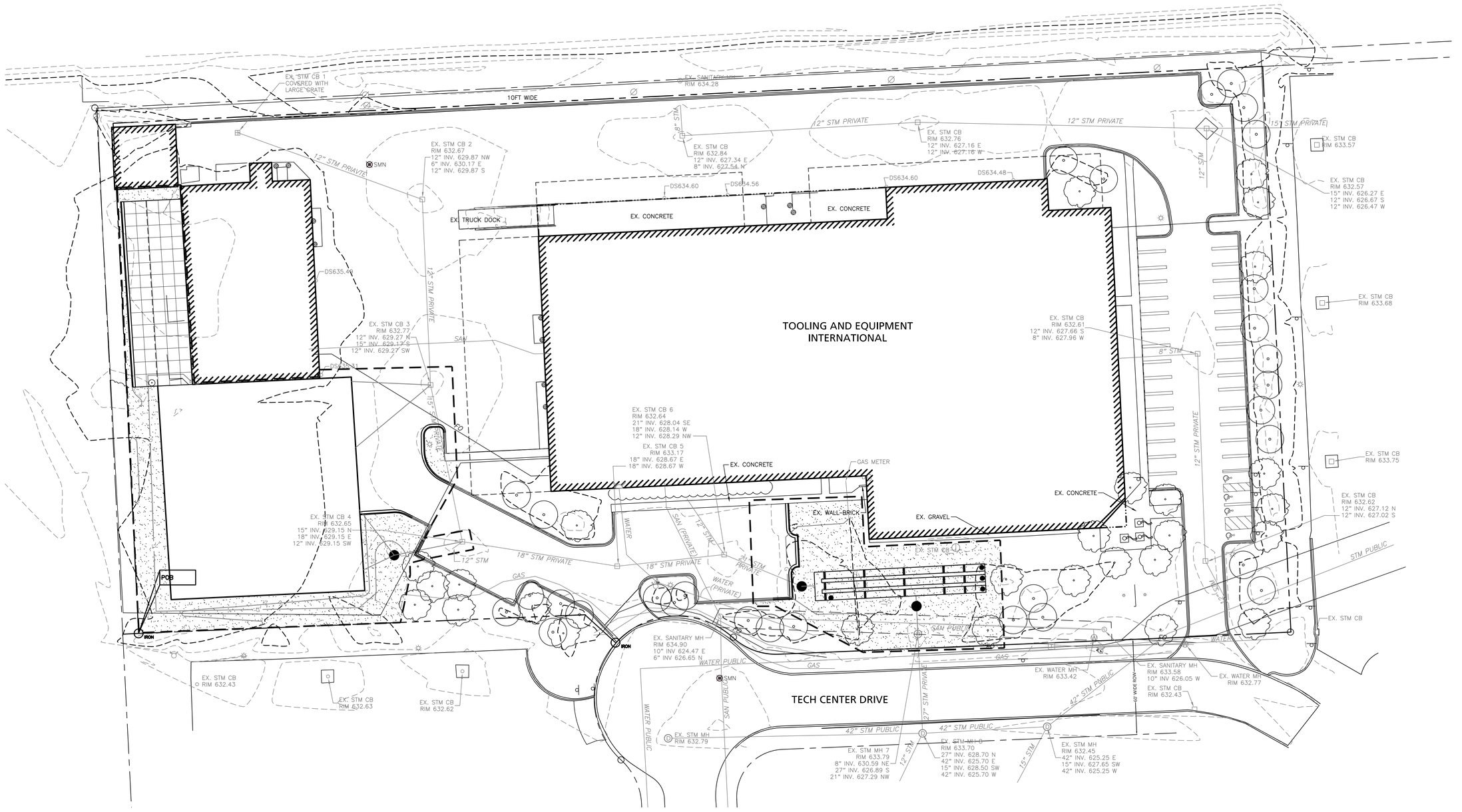

LANDSCAPE NOTES

1. TOPSOIL (4") AND SEED ALL DISTURBED TURF AREAS.
2. ALL IMPORTED TOPSOIL SHALL BE SCREENED AND BE APPROVED BY LANDSCAPE ARCHITECT/ENGINEER PRIOR TO INSTALLATION. PROVIDE CERTIFICATION FOR ALL IMPORTED TOPSOIL.
3. MULCH ALL LANDSCAPE BEDS PER SPECIFICATIONS.

LANDSCAPE LEGEND

LIMIT OF DISTURBANCE

SEEDING

Know what's **below.** **Call** before you dig.

0 15 30 60 90 120

B R i
Beckett&Raeder
Landscape Architecture Planning, Engineering & Environmental Services

Beckett & Raeder, Inc.
535 West William, Suite 101
Ann Arbor, MI 48103

734 **663.2622** ph
734 **663.6759** fx

Consultants

Seal

Project Title

Tooling and Equipment Int Foundry Addition

12550 and 12560 Tech Center Drive
Livonia, MI

Sheet Title

Landscape Plan

Dates

Dates	Issued for
02.16.21	Owner Review
03.10.21	Owner Review
03.22.21	City Review
04.22.21	City Review

Scale

1" = 30'

Quality Control

Drawn:	AT
Checked:	KE
Approved:	KE

Project Number

2020.13

Sheet Number

L1.0

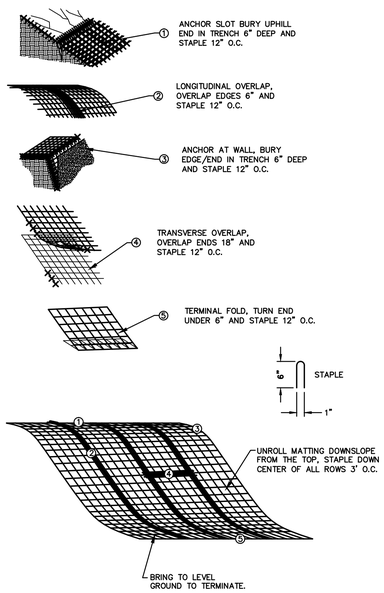

STRAW MULCH EROSION CONTROL BLANKET

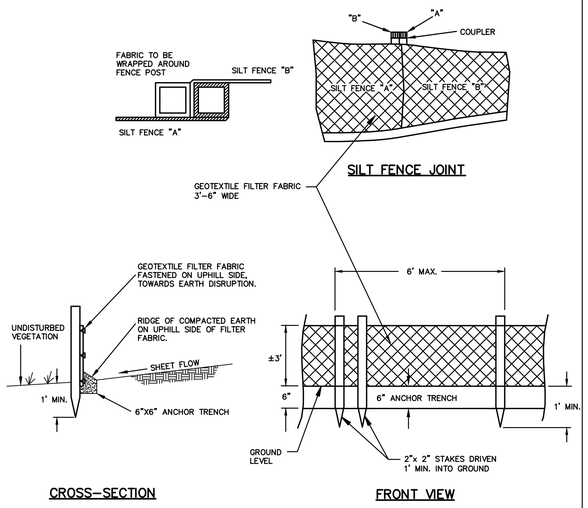

FABRIC SILT FENCE DETAIL

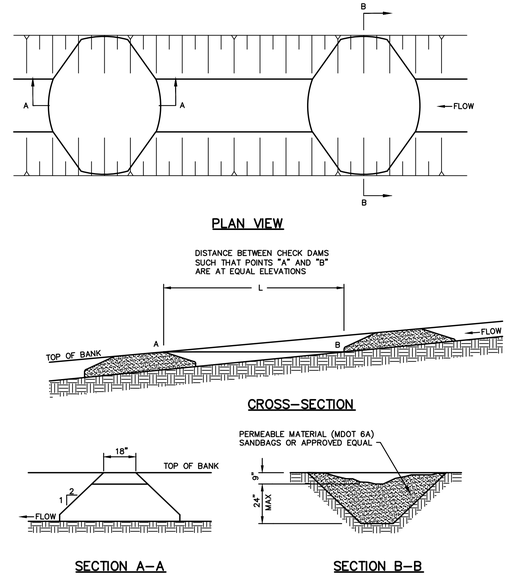

TEMPORARY CHECK DAM DETAIL

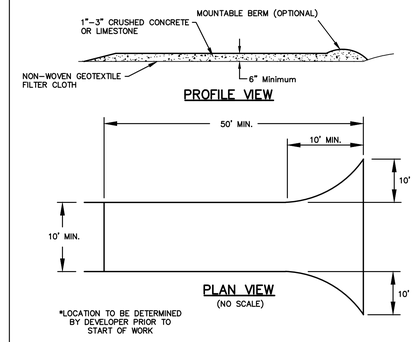

CONSTRUCTION ACCESS DRIVE DETAIL

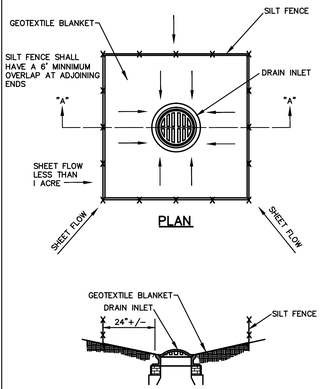

REAR YARD INLET SILT FENCE BARRIER

BAG DETAIL

NOTE: TEMPORARY INLET SEDIMENT FILTER TO BE INSTALLED ON ALL PAVED CATCH BASINS OR STORM INLETS. INLET FILTER TO BE SIMILAR TO "STREAMGUARD" AS MANUFACTURED BY STORMWATER SERVICES CORP. (206-767-0441) OR "SILTSACK" AS MANUFACTURED BY ATLANTIC CONSTRUCTION FABRICS, INC., (800-448-3636). CLEAN FILTER AS NEEDED.

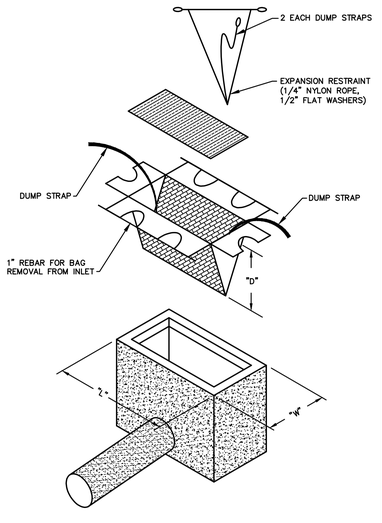

SILTSACK SEDIMENT FILTER DETAIL

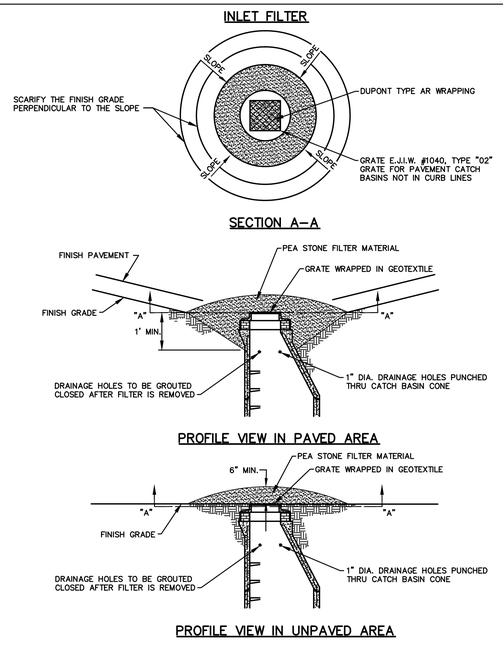

INLET FILTER DETAILS FOR SOIL EROSION & SEDIMENTATION CONTROL

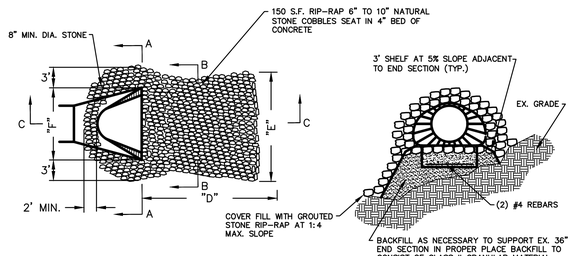

PIPE ø	"D"	"E"	"F"	SYD
12"	5'-0"	6'-6"	3'-0"	3.7
15"	5'-0"	7'-0"	3'-0"	4.1
18"	5'-0"	7'-6"	3'-6"	4.3
21"	5'-6"	8'-0"	4'-0"	5.4
24"	6'-0"	8'-6"	4'-6"	6.3
27"	6'-6"	9'-0"	5'-0"	7.3
30"	7'-0"	9'-9"	5'-6"	8.4
36"	8'-0"	10'-9"	6'-0"	10.3
42"	9'-0"	11'-9"	6'-6"	12.0
48"	10'-0"	13'-0"	7'-0"	14.2
54"	11'-0"	13'-6"	7'-6"	15.9
60"	12'-0"	14'-0"	8'-0"	17.6

STORM OUTLET DETAIL WITH GROUTED STONE RIP-RAP

SOIL EROSION AND SEDIMENTATION CONTROL MAINTENANCE SCHEDULE AND NOTES:

1. ALL MUD, DIRT, AND/OR DEBRIS TRACKED OR SPILLED ONTO ANY PAVED AREAS SHALL BE REMOVED/CLEANED DAILY IN A PROMPT MANNER BY THE CONTRACTOR AND/OR BUILDER. SCRAPING AND/OR SWEEPING OF PAVED AREAS TO REMOVE DEBRIS WILL BE REQUIRED WEEKLY.
2. SILT FENCE MAINTENANCE SHALL INCLUDE THE REMOVAL OF ANY BUILT-UP SEDIMENT WHEN THE HEIGHT OF THE SEDIMENT ACCUMULATES TO ⅓ TO ½ OF THE HEIGHT OF THE FENCE OR IF THE FABRIC BEGINS TO SAG. THE CONTRACTOR IS RESPONSIBLE FOR THE REMOVAL, REPLACEMENT, RETRENCHING AND BACKFILLING OF THE SILT FENCE SHOULD IT FALL OR BE DAMAGED DURING CONSTRUCTION.
3. SILT SACK MAINTENANCE SHALL INCLUDE THE REMOVAL OF ANY ACCUMULATED SEDIMENTATION OR OTHER DEBRIS FROM THE SILT SACK. THE REMOVAL OF SEDIMENTATION SHOULD BE ACCOMPLISHED BY USING A STIFF BRISTLE BROOM OR SQUARE POINT SHOVEL. IF SILT SACKS CANNOT BE CLEANED, OR ARE DAMAGED, THEY MUST BE REPLACED ACCORDING TO THE PLANS.
4. PERMANENT SOIL EROSION CONTROL MEASURES FOR ALL SLOPES, CHANNELS, DITCHES OR ANY DISTURBED LAND AREA SHALL BE COMPLETED WITHIN 5 CALENDAR DAYS AFTER FINAL GRADING OR FINAL EARTH CHANGES HAVE BEEN COMPLETED. WHEN IT IS NOT POSSIBLE TO PERMANENTLY STABILIZE A DISTURBED AREA AFTER AN EARTH CHANGE HAS BEEN COMPLETED, OR WHERE SIGNIFICANT EARTH CHANGE ACTIVITY CEASED, TEMPORARY SOIL EROSION CONTROL MEASURES SHALL BE IMPLEMENTED WITHIN 5 CALENDAR DAYS. ALL TEMPORARY SOIL EROSION CONTROL MEASURES SHALL BE MAINTAINED UNTIL PERMANENT SOIL EROSION CONTROL MEASURES ARE IMPLEMENTED AND /OR ESTABLISHED. ALL PERMANENT SOIL EROSION CONTROL MEASURES WILL BE IMPLEMENTED AND ESTABLISHED BEFORE A CERTIFICATE OF COMPLIANCE IS ISSUED. ALL DRAIN BANKS DISTURBED BY CONSTRUCTION SHALL BE RESTORED WITHIN 5 CALENDAR DAYS AND SOD PEGGED IN PLACE.
5. FILTER BARRIERS AND LOW POINT INLET FILTERS SHALL BE INSPECTED IMMEDIATELY AFTER EACH RAINFALL AND AT LEAST DAILY DURING PROLONGED RAINFALL. ANY REQUIRED REPAIRS SHALL BE MADE IMMEDIATELY.
6. IF ANY FILTER FABRIC DECOMPOSES OR BECOMES INEFFECTIVE PRIOR TO THE END OF THE EXPECTED USABLE LIFE, AND THE BARRIER IS STILL REQUIRED, THE FABRIC SHALL BE REPLACED PROMPTLY. FILTER FENCING WHICH SAGS, FALLS OVER OR IS NOT STAKED IN, SHOULD PROMPTLY REPAIRED OR REPLACED.
7. ANY SEDIMENT DEPOSITS REMAINING IN PLACE AFTER THE SILT FENCE OR FILTER BARRIER IS NO LONGER REQUIRED SHALL BE DRESSED TO CONFORM WITH THE EXISTING GRADE, PREPARED, AND SEEDED.
8. ALL SOIL EROSION AND SEDIMENTATION CONTROL MEASURES BOTH PERMANENT AND TEMPORARY SHALL BE THE RESPONSIBILITY OF THE PROPERTY OWNER, UNLESS OTHERWISE NOTED. THESE MAINTENANCE RESPONSIBILITIES SHALL BE PART OF ANY FUTURE SALES AGREEMENT.
9. EXCAVATED MATERIALS SHALL REMAIN ON-SITE. PARTICULAR CARE SHOULD BE TAKEN WHEN WORKING ALONG THE PERIMETER OF THE SITE. IN NO EVENT SHALL THE WORK AREA EXTEND BEYOND THE LIMITS INDICATED ON THE PLANS.
10. ALL SOIL EROSION AND SEDIMENT CONTROL WORK SHALL CONFORM TO THE STANDARDS AND SPECIFICATIONS OF WAYNE COUNTY AND THE CITY OF LIVONIA.
11. DAILY INSPECTIONS SHALL BE MADE BY THE CONTRACTOR TO DETERMINE EFFECTIVENESS OF THE SOIL EROSION AND SEDIMENTATION CONTROL MEASURES. ANY NECESSARY REPAIRS SHALL BE PERFORMED WITHOUT DELAY.
12. EROSION AND/OR SEDIMENT FROM ON-SITE WORK SHALL BE CONTAINED ON THE SITE AND NOT ALLOWED TO COLLECT ON ANY OFF-SITE AREAS, OR IN WATERWAYS. WATERWAYS INCLUDE BOTH NATURAL AND MAN-MADE OPEN DITCHES, STREAMS, STORM DRAINS, LAKES, AND PONDS.
13. SOIL EROSION AND SEDIMENT CONTROL MEASURES ARE TO BE INSTALLED PRIOR TO, OR AS THE FIRST STEP IN CONSTRUCTION. SESC PRACTICES SHALL BE APPLIED AS A PERIMETER DEFENSE AGAINST THE TRANSPORTING OF SILT OFF-SITE.
14. THE CONTRACTOR SHALL APPLY TEMPORARY SOIL EROSION AND SEDIMENTATION CONTROL MEASURES AS REQUIRED, AND AS DIRECTED ON THESE PLANS. TEMPORARY MEASURES SHALL BE REMOVED AS SOON AS PERMANENT STABILIZATION OF SLOPES, DITCHES, AND OTHER EARTH CHANGES HAVE BEEN ACCOMPLISHED AND APPROVED BY THE CITY OF LIVONIA ENGINEERING DIVISION.
15. DEBRIS FROM THE PROJECT SITE SHALL BE LEFT ON-SITE BY DELIVERY OR CONSTRUCTION VEHICLES THROUGH THE USE OF CLEAN STONE EXIT(S). SHOULD THE STONE BECOME LESS EFFECTIVE AND/OR EFFICIENT IT SHALL BE REPLACED. ALL CONSTRUCTION TRAFFIC MUST USE THE CLEAN STONE EXIT(S).
16. DUST CONTROL SHALL BE EXERCISED AT ALL TIMES WITHIN THE PROJECT BY THE DEVELOPER AND/OR HIS CONTRACTORS, SPRINKLING TANK TRUCKS MUST BE AVAILABLE AT ALL TIMES TO BE USED ON HAUL ROUTES OR OTHER PLACES WHERE DUST MAY BECOME A PROBLEM.
17. EARTH EMBANKMENT BRIDGES PLACED OVER NEW PAVEMENT SHALL BE LOCATED ONLY AT PAVEMENT HIGH-POINTS AND SHALL HAVE STRAW BALES PLACED ALONG EACH SIDE OF THE BRIDGE FOR THE WIDTH OF PAVEMENT.
18. IMMEDIATELY AFTER SEEDING, ALL SEEDED AREAS SHALL BE MULCHED WITH UNWEATHERED SMALL GRAIN STRAW OR HAY, SPREAD UNIFORMLY AT THE RATE OF 1½ TONS TO 2 TONS PER ACRE OR 100 POUNDS PER 1000 SQUARE FEET. ANCHOR MULCH WITH DISC-TYPE ANCHORING TOOL OR OTHER MEANS APPROVED BY THE CITY OF LIVONIA ENGINEERING DIVISION.

CITY OF LIVONIA
Department of Public Works, Engineering Division
33000 Civic Center Drive
Livonia, Michigan 48154
(734) 466-2570, (734) 466-2195 Fax

SOIL EROSION & SEDIMENTATION CONTROL

Standard Detail Sheet

1

JOB No.

DATE: 1/23/2003

SHEET 1 OF 1

CADD: dl

ENG: tz

PM:

TECH:

Soil Erosion Detail.dwg

REVISIONS:	REV. DATE
Checkerboard Responsibility Note	2/2007
Detail Dim. Detail Added	2/2007
Misc. Text Edits	3/2013

A SOLID COVER SHALL BE PROVIDED IN LIEU OF THE PERFORATED COVER SHOWN, WHEN THE COVER IS LOCATED WITHIN THE SIDE WALK AREA.

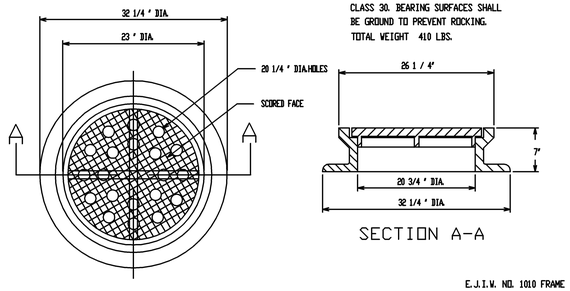

material

GREY IRON A.S.T.M. STD. SPEC. A-48, CLASS 30. BEARING SURFACES SHALL BE GROUND TO PREVENT ROCKING.
TOTAL WEIGHT 410 LBS.

E.J.I.W. NO. 1010 FRAME WITH TYPE 'B' COVER

SCALE 1 ' = 1'- 0'

FRAME & COVER "A"

A SOLID COVER SHALL BE PROVIDED IN LIEU OF THE TYPE ' N ' OVEL GRATE SHOWN, WHEN THE COVER IS LOCATED WITHIN A SIDEWALK AREA.
TYPICALLY USED IN LAWN AREA.

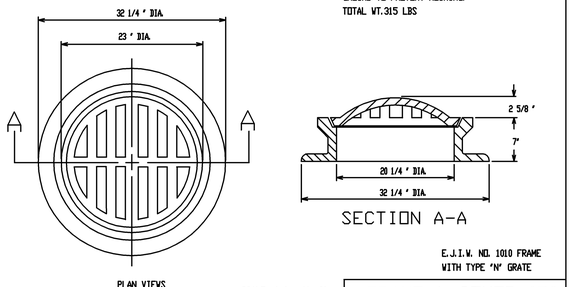

MATERIAL

GREY IRON, A.S.T.M. STD, SPEC. A48, CLASS 30. BEARING SURFACES SHALL BE GROUND TO PREVENT ROCKING.
TOTAL WT.315 LBS

E.J.I.W. NO. 1010 FRAME WITH TYPE 'N' GRATE

SCALE 1 ' = 1'- 0'

FRAME & COVER "B"

TYPICALLY USED IN DITCH AREAS.

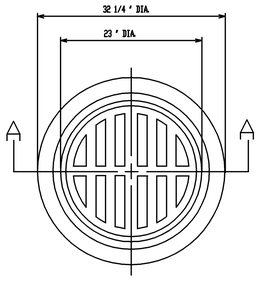

MATERIAL

GREY IRON, A.S.T.M. STD, SPEC. A48, CLASS 30. BEARING SURFACES SHALL BE GROUND TO PREVENT ROCKING.
TOTAL WT.315 LBS

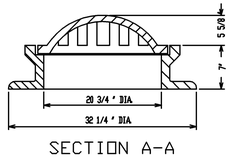

E.J.I.W. NO. 1010 FRAME WITH TYPE 'D' GRATE

SCALE 1 ' = 1'- 0'

FRAME & COVER "C"

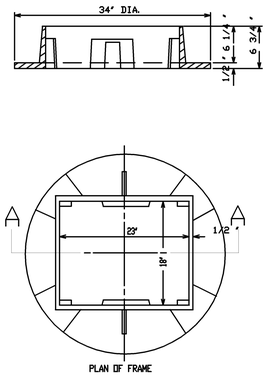

MATERIAL

GREY IRON, A.S.T.M. STD, SPEC. A48, CLASS 30. BEARING SURFACES SHALL BE GROUND TO PREVENT ROCKING.
TOTAL WEIGHT 315 LBS

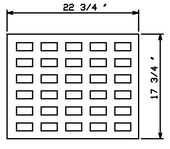

Series 5000 MI Cover
Trout Logo Grate



DUMP NO WASTE!

E.J.I.W. NO 5080

SCALE 1 ' = 1'- 0'

FRAME & GRATE "D"

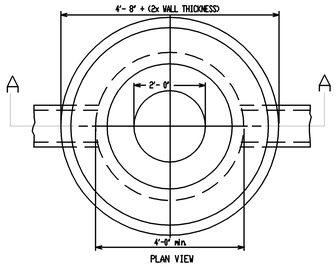

NOTE:
ALL VERTICAL HOLES IN CONCRETE BLOCK STRUCTURE WALLS SHALL BE COMPLETELY FILLED WITH MORTAR. ALL VERTICAL WALL JOINTS SHALL BE CEMENT POINTED.

BLOCK WALL CONSTRUCTION WILL BE ALLOWED ONLY WHEN AUTHORIZED BY THE ENGINEER.

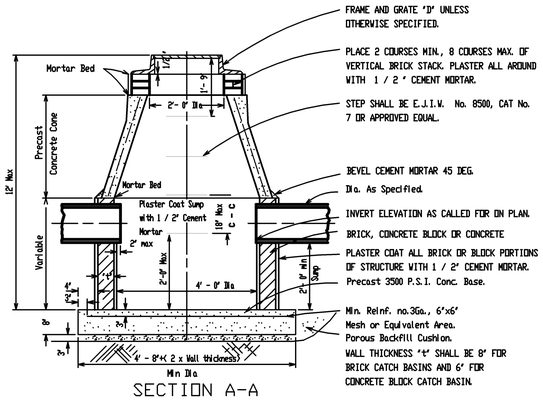

FRAME AND GRATE 'D' UNLESS OTHERWISE SPECIFIED.

PLACE 2 COURSES MIN., 8 COURSES MAX. OF VERTICAL BRICK STACK. PLASTER ALL AROUND WITH 1 / 2 ' CEMENT MORTAR.

STEP SHALL BE E.J.I.W. No. 8500, CAT No. 7 OR APPROVED EQUAL.

BEVEL CEMENT MORTAR 45 DEG.

Dia. As Specified.

INVERT ELEVATION AS CALLED FOR ON PLAN.

BRICK, CONCRETE BLOCK OR CONCRETE

PLASTER COAT ALL BRICK OR BLOCK PORTIONS OF STRUCTURE WITH 1 / 2' CEMENT MORTAR.
Precast 3500 P.S.I. Conc. Base.

Min. Reinf. no.3Ga., 6'x6' Mesh or Equivalent Area.
Porous Backfill Cushion.
WALL THICKNESS 't' SHALL BE 8" FOR BRICK CATCH BASINS AND 6" FOR CONCRETE BLOCK CATCH BASIN.

Scale 1 / 2' = 1'- 0'

CATCH BASIN "A"

NOTE:
STANDARD INLETS 'A' AND 'B' SHALL BE USED ONLY WHEN OUTLETTING TO A STRUCTURE HAVING A SUMP OR WHEN OUTLETTING TO A DITCH

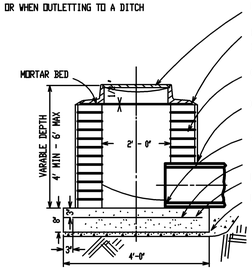

FRAME & GRATE 'D' UNLESS SPECIFIED OTHERWISE.

Plaster Coat Entire Structure With 1 / 2" Cement Mortar.

6" Cement Block Or 8" Brick.

Dia. As Specified.

Inv. Elev. As Called For On the Plans.

Min.Reinf. No 3 Ga., 6'x 6' Mesh Or Equivalent Area

Precast 3500 P.S.I. Conc Base.

Porous Backfill Cushion.

Scale 1 / 2 ' = 1'

STANDARD INLET "A"

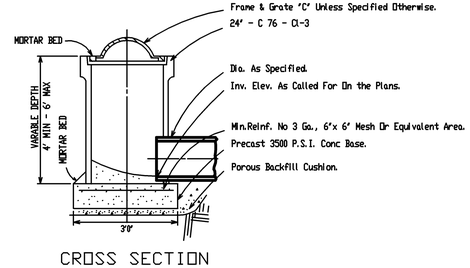

Frame & Grate 'C' Unless Specified Otherwise.
24" - C 76 - CI-3

Dia. As Specified.

Inv. Elev. As Called For On the Plans.

Min.Reinf. No 3 Ga., 6'x 6' Mesh Or Equivalent Area.

Precast 3500 P.S.I. Conc Base.

Porous Backfill Cushion.

Scale 1 / 2 ' = 1'

STANDARD INLET "B"

NOTE:
No Opening Shall Be Made In Precast Units Which Would Leave Less Then 24" of Undisturbed Precast Pipe or Would Remove More Then 30% of the Circumference Along Any Horizonal Plane. If Those Requirement Cannot be Followed, the catch basin Shall Be Built Of Brick Or Block When Approved, To a Minimun of 8" Above Such Openings.

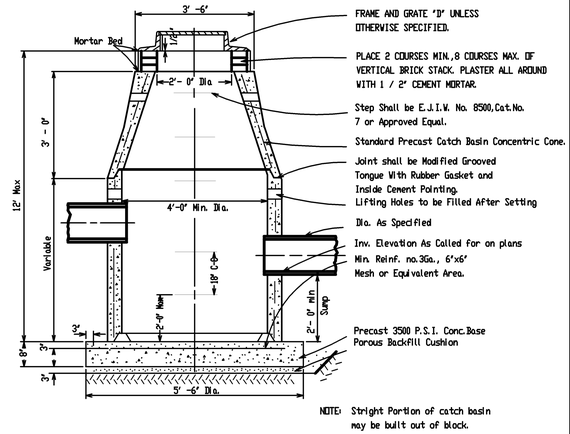

FRAME AND GRATE 'D' UNLESS OTHERWISE SPECIFIED.

PLACE 2 COURSES MIN.,8 COURSES MAX. OF VERTICAL BRICK STACK. PLASTER ALL AROUND WITH 1 / 2" CEMENT MORTAR.

Step Shall be E.J.I.W. No. 8500,Cat.No. 7 or Approved Equal.

Standard Precast Catch Basin Concentric Cone.

Joint shall be Modified Grooved Tongue With Rubber Gasket and Inside Cement Pointing.
Lifting Holes to be Filled After Setting

Dia. As Specified

Inv. Elevation As Called for on plans
Min. Reinf. no.3Ga., 6'x6' Mesh or Equivalent Area.

Precast 3500 P.S.I. Conc.Base
Porous Backfill Cushion

NOTE: Stright Portion of catch basin may be built out of block.

Scale 1 / 2 ' = 1'

CATCH BASIN "B"

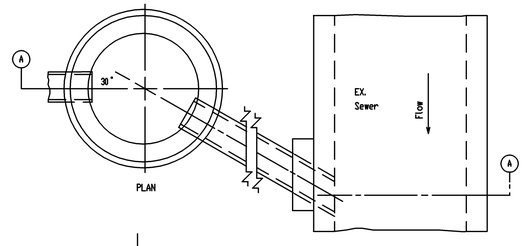

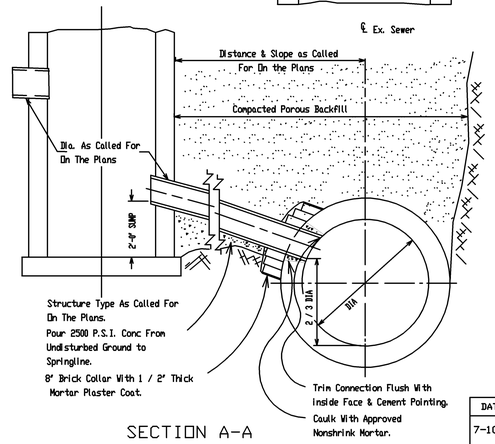

Scale 3 / 8 ' = 1'

SPECIAL CONNECTIONS TO EXISTING SEWERS

NOTE:
WHERE EXCAVATION OCCURS UNDER OR WITHIN 3' OF AN EXISTING OR PROPOSED ROAD SURFACE PAVEMENT, CURBS, DRIVEWAY OR SIDEWALK, ALL WORK SHALL BE DONE IN ACCORDENCE WITH THE SPECITFICATIONS ENTITLED 'CITY OF LIVINIA' REQUIREMENTS FOR TRENCH BACKFILL WHERE A SEWER, WATER MAIN OR OTHER UTILITY WILL BE CONSTRUCTED IN A STREET OR HIGHWAY UNDER THE JURISDICTION OF THE CITY.

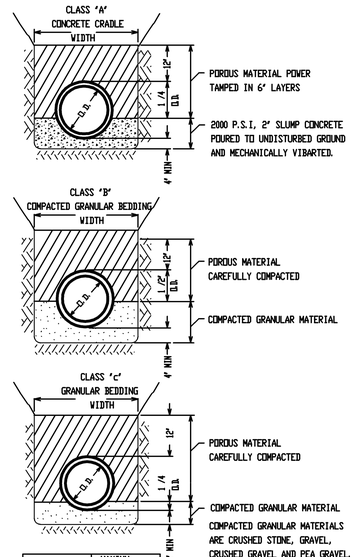

PIPE DIA.	MAXIUM TRENCH WIDTH
UP TO 30"	O.D. + 16'
36'- 48"	O.D. + 2'
54' & UP	O.D. + 3'

PIPE BEDDING METHOD

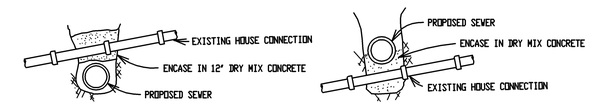

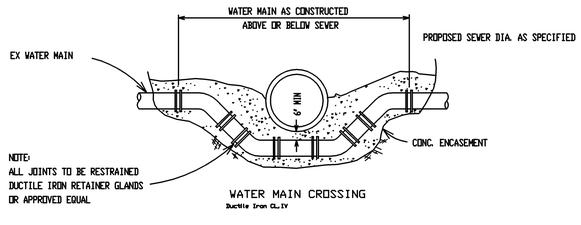

UTILITY CROSSINGS

LIVONIA, MICHIGAN

DEPARTMENT OF ENGINEERING

STORM SEWER DETAILS AND APPURTENANCES

DATE	ADDITIONS and REVISIONS
7-10-80	'TRENCH BEDDING AND BACKFILL METHODS' CHANGED TO PIPE BEDDING METHOD.
3-28-88	FRAME & COVER 'C' REVISED. J.p.h.
1-11-90	FRAME & COVER 'C' REVISED.
10-28-02	MI Trout Logo R.G.

DESIGNED BY — CONSTRUCTED
DRAWN BY — DATE OF PLAN
CHECKED BY — SCALE — JOB NO.
APPROVED BY — SHEET — OF — SHEETS — FILE

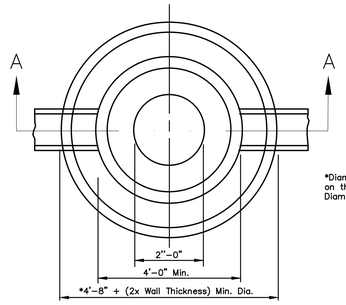

PLAN VIEW
No Scale

NOTE: M.H. "A" SHALL BE USED FOR MANHOLES STRUCTURES ON ALL STORMS SEWERS WHERE THE DIAMETER OF OUTLET PIPE IS 24" AND SMALLER UNLESS CALLED FOR OTHERWISE ON THE PLANS.

*Diameter of Manhole Shall be Increased as Shown on the Plans or in the Proposal Depending on The Diameters and Angles of Sewers.

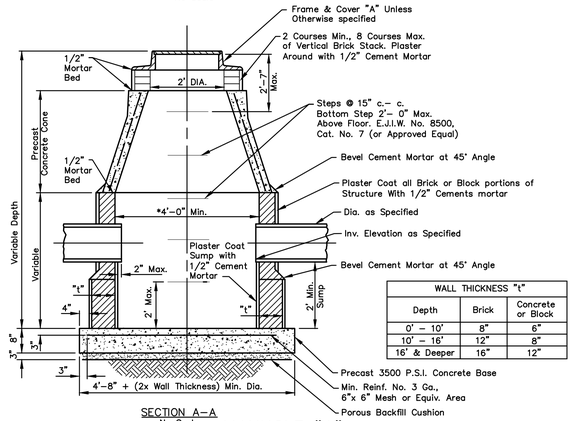

SECTION A–A
No Scale

WALL THICKNESS "t"		
Depth	Brick	Concrete or Block
0' – 10'	8"	6"
10' – 16'	12"	8"
16' & Deeper	16"	12"

MANHOLE "A"

Block Wall Construction will Be Allowed Only When Authorized By The City Engineer.

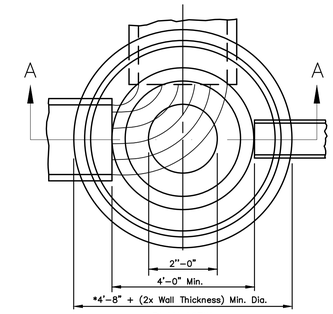

PLAN VIEW
No Scale

NOTE: M.H. "B" SHALL BE USED FOR MANHOLES STRUCTURES ON ALL STORMS SEWERS WHERE THE DIAMETER OF OUTLET PIPE IS 27" AND LARGER, UNLESS CALLED FOR OTHERWISE ON THE PLANS.

*Diameter of Manhole Shall be Increased as Shown on the Plans or in the Proposal Depending on The Diameters and Angles of Sewers.

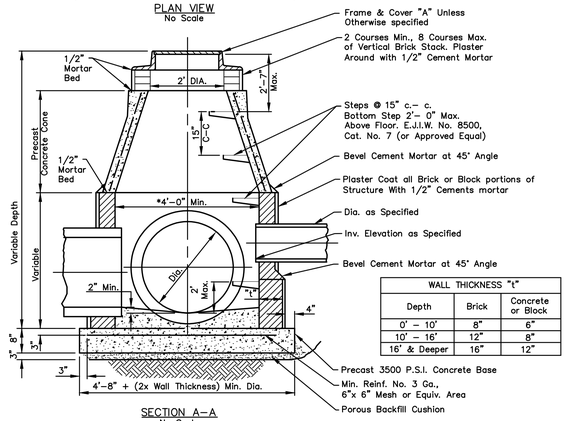

SECTION A–A
No Scale

WALL THICKNESS "t"		
Depth	Brick	Concrete or Block
0' – 10'	8"	6"
10' – 16'	12"	8"
16' & Deeper	16"	12"

MANHOLE "B"

NOTE:
MANHOLE "C" SHALL BE USED FOR STRUCTURES ON ALL STORM SEWERS WHERE 48" OR LARGER DIA. PIPES INTERSECT.

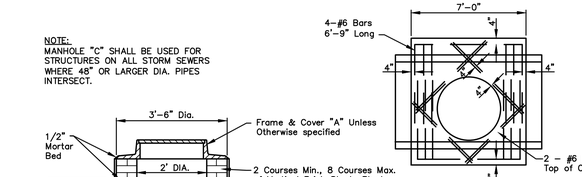

ROOF PLAN
Scale: 1/4"=1'

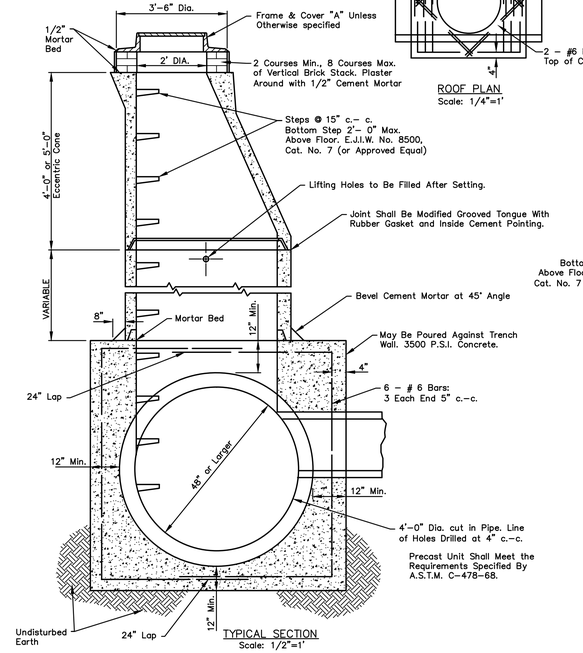

TYPICAL SECTION
Scale: 1/2"=1'

MANHOLE "C"

NOTE:
MANHOLE "D" SHALL BE USED WHERE THE DEPTH OF COVER FROM THE TOP OF CASTING TO THE TOP OF SEWER IS LESS THEN 4'–0". MANHOLE "D" SHALL BE CONSTRUCTED WITH A 2' SUMP WHERE DIAMETER OF OUTLET SEWER IS 24" OR LESS

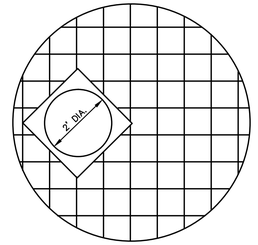

TOP SLAB

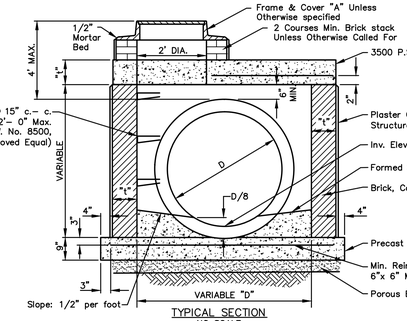

TYPICAL SECTION
NO SCALE

Outlet I.D.	M.H. D	Top Slab "t"	Walls "t"	Reinforcing Steel (Slab)
24" OR LESS	4'–0"	9"	8"	3/4" @ 9" (each way)
30"	4'–0"	9"	8"	3/4" @ 9" (each way)
36"	4'–0"	9"	12"	3/4" @ 9" (each way)
42"	5'–0"	10"	12"	3/4" @ 9" (each way)
48"/54"	6'–0"	11"	12"	7/8" @ 9" (each way)

M.H. D	Top Slab "t"	Walls "t"	Reinforcing Steel (Slab)
7'–0"	12"	12"	7/8" @ 9" (each way)
8'–0"	12"	12"	1" @ 9" (each way)

*Diameter Of Manhole Shall Be Increased As Shown On The Plans Or In The Proposal Depending On The Diameters And Angles of Sewers.

MANHOLE "D"

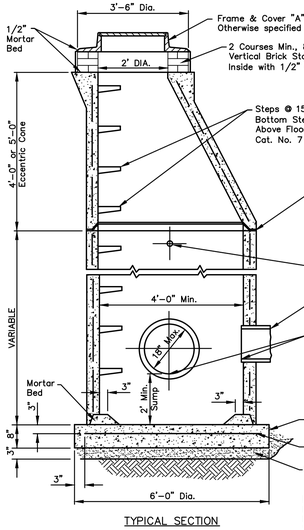

TYPICAL SECTION

NOTE:
MANHOLE "E" SHALL BE USED ONLY WHEN MEETING CONDITIONS STATED IN THE "GENERAL MANHOLE NOTES", ITEM NO. 2(A).

Precast Units Shall Meet the Requirements Specified By A.S.T.M. C–478–68

PRECAST MANHOLE "E"

Scale: 1/2"=1'

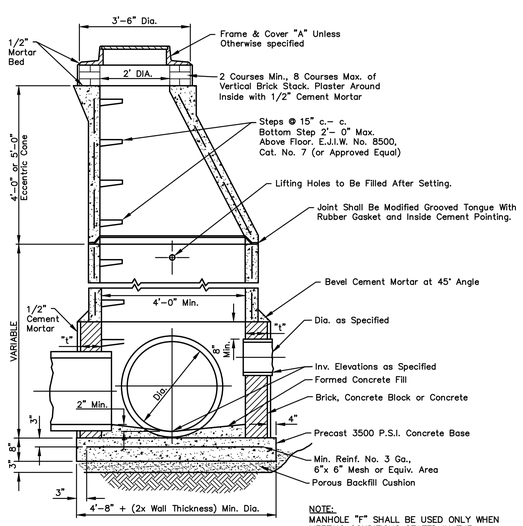

TYPICAL SECTION
Scale: 1/2"=1'

NOTE:
MANHOLE "F" SHALL BE USED ONLY WHEN MEETING CONDITIONS STATED IN THE "GENERAL MANHOLE NOTES", ITEM NO. 2(B).

WALL THICKNESS "t"		
Depth	Brick	Concrete or Block
0' – 10'	8"	6"
10' – 16'	12"	8"
16' & Deeper	16"	12"

Precast Units Shall Meet the Requirements Specified By A.S.T.M. C–478–68

*Dia of M.H. Shall Be Increased as Shown on the Plans, or in the Proposal, Depending on the Diameters and Angles of the Sewers.

PRECAST MANHOLE "F"

Scale: 1/2"=1'

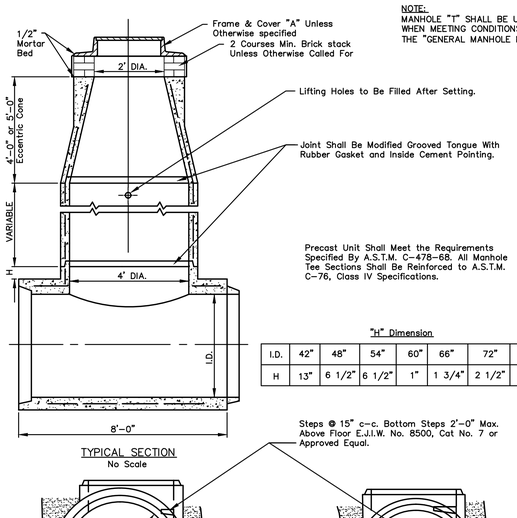

TYPICAL SECTION
No Scale

NOTE:
MANHOLE "T" SHALL BE USED ONLY WHEN MEETING CONDITIONS STATED IN THE "GENERAL MANHOLE NOTES," ITEM 2.

Precast Unit Shall Meet the Requirements Specified By A.S.T.M. C–478–68. All Manhole Tee Sections Shall Be Reinforced to A.S.T.M. C–76, Class IV Specifications.

"H" Dimension

I.D.	42"	48"	54"	60"	66"	72"	78"	84"	OVER 84"
H	13"	6 1/2"	6 1/2"	1"	1 3/4"	2 1/2"	4"	6"	7"

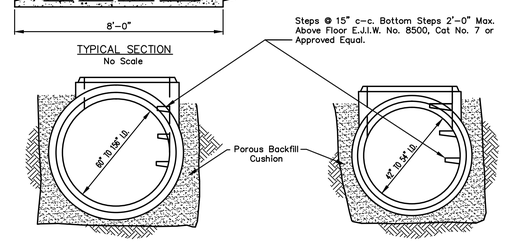

OFFSET MANHOLE TEE

CENTERED MANHOLE TEE

MANHOLE "T"

GENERAL MANHOLE NOTES:

1. ALL materials and workmanship shall be in accordance with the current standards and specifications set by the City of Livonia.
2. The Contractor shall construct Manholes with Precast Reinforced Concrete units ("E", "F" and "T") in lieu of Concrete, Brick and Block Manholes ("A" and "B"), in accordance with the following conditions.
   a. Maximum diameter of sewer outlet in any precast unit shall be 18" (Manhole "E" only).
   b. No openings shall be made in precast unit which would leave less then 24" of undisturbed precast pipe or would remove more then 30% of the circumference along any horizontal plane.
   c. Structures for sewers larger then 18" or those not meeting the opening requirements shall be built of block or brick up to a minimum of 8" above the top of Sewer, with precast units being used above this point. Where the precast units rest on the block or brick, the groove in the precast unit will be filled with mortar.
   d. Openings for the outlet sewer shall be precast with a diameter of 3 inches larger then the outside diameter of the outlet pipe. All other openings shall be made in the field after manhole has been constructed.
3. All vertical opening in concrete block structures walls shall be completely filled with mortar. All vertical wall joints shall be cement point.
4. A "Poured 3500 p.s.i. Concrete Base", without steel reinforcement, may be substituted for a precast base when approved by the City Engineer. A porous backfill cushion will not be required under the poured base, unless the Contractor has excavated below the required elevation at which time the Engineer will decide as to the merits of increasing the thickness of the concrete base or the use of a porous backfill cushion.
5. Where unstable ground conditions are encountered, slag or stone bedding shall be used as directed by the City Engineer in order to provide a stable foundation for pipe and manholes, cost to be included in the unit price for pipe.
6. All pipe entering or leaving a manhole shall be adequately supported by pouring 2500 p.s.i. concrete fill from undisturbed earth to spring line.
7. Wherever existing manholes or sewer pipe are to be tapped, drill holes at 4" center to center around periphery or opening to create a plane of weakness, before breaking section out.

Storm Sewer Manhole Standard Details

JOB No.

REVISIONS:	REV. DATE
Misc. Revisions	09/2007

DATE: 02/1992
SHEET 1 OF 2
CADD: dwl
ENG: dwl
PM: tz
TECH:
Storm Manhole Details.dwg
FB#:

1

CITY OF LIVONIA
Department of Public Works – Engineering Division
33000 Civic Center Drive
Livonia, Michigan 48154
(734) 466–2570 Office, (734) 466–2195 Fax

RELEASED FOR :	DATE

A SOLID COVER SHALL BE PROVIDED IN LIEU OF THE PERFORATED COVER SHOWN, WHEN THE COVER IS LOCATED WITHIN THE SIDE WALK AREA.

MATERIAL:
GREY IRON, A.S.T.M. STD, SPEC. A48, CLASS 30.
BEARING SURFACES SHALL BE GROUND TO PREVENT ROCKING.
TOTAL WT. 410 LBS

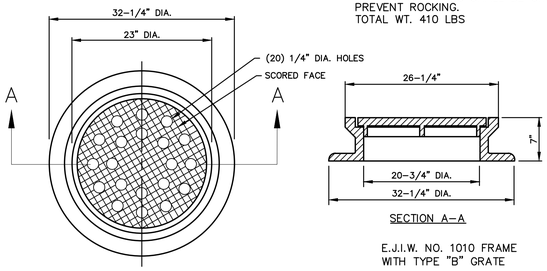

E.J.I.W. NO. 1010 FRAME
WITH TYPE "B" GRATE

FRAME & COVER "A"
Scale: 1"=1'

A SOLID COVER SHALL BE PROVIDED IN LIEU OF THE TYPE "N" OVAL GRATE SHOWN, WHEN THE COVER IS LOCATED WITHIN A SIDEWALK AREA.

TYPICALLY USED IN LAWN AREAS

MATERIAL:
GREY IRON, A.S.T.M. STD, SPEC. A48, CLASS 30.
BEARING SURFACES SHALL BE GROUND TO PREVENT ROCKING.
TOTAL WT. 315 LBS

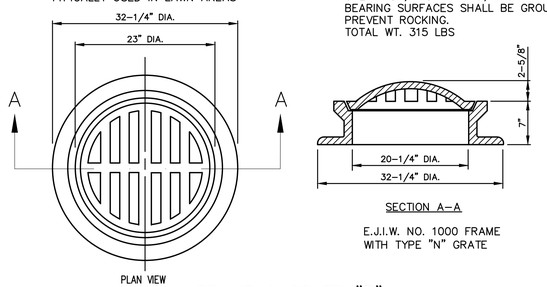

E.J.I.W. NO. 1000 FRAME
WITH TYPE "N" GRATE

FRAME & COVER "B"
Scale: 1"=1'

TYPICALLY USED IN DITCH AREAS.

MATERIAL:
GREY IRON, A.S.T.M. STD, SPEC. A48, CLASS 30.
BEARING SURFACES SHALL BE GROUND TO PREVENT ROCKING.
TOTAL WT. 315 LBS

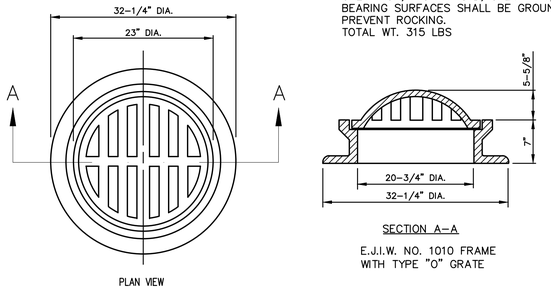

E.J.I.W. NO. 1010 FRAME
WITH TYPE "O" GRATE

FRAME & COVER "C"
Scale: 1"=1'

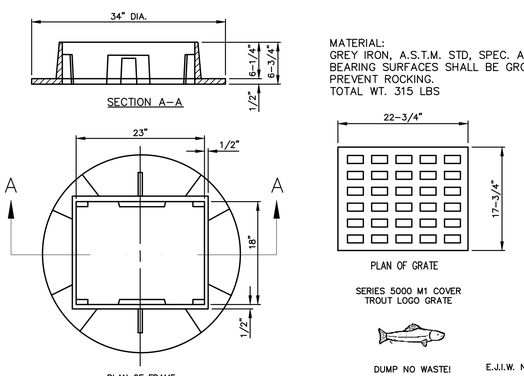

MATERIAL:
GREY IRON, A.S.T.M. STD, SPEC. A48, CLASS 30.
BEARING SURFACES SHALL BE GROUND TO PREVENT ROCKING.
TOTAL WT. 315 LBS

SERIES 5000 M1 COVER
TROUT LOGO GRATE

DUMP NO WASTE!

E.J.I.W. NO. 5080

FRAME & GRATE "D"
Scale: 1"=1'

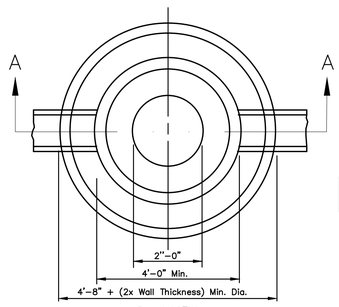

NOTE:
ALL VERTICAL HOLES IN CONCRETE BLOCK STRUCTURE WALLS SHALL BE COMPLETELY FILLED WITH MORTAR. ALL VERTICAL WALL JOINTS SHALL BE CEMENT POINTED.

Block Wall Construction will Be Allowed Only When Authorized By The City Engineer.

PLAN VIEW
No Scale

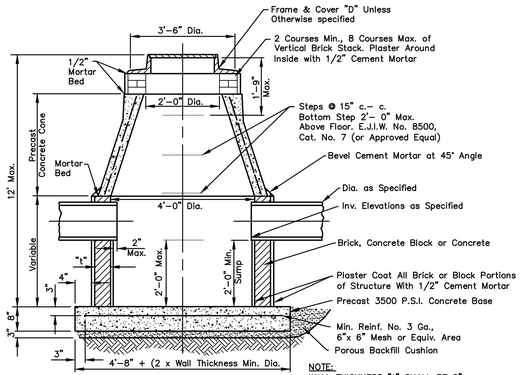

NOTE:
WALL THICKNESS "t" SHALL BE 8" FOR BRICK CATCH BASINS AND 6" FOR CONCRETE BLOCK CATCH BASIN.

STANDARD CATCH BASIN "A"
Scale: 1/2"=1'

NOTE:
STANDARD INLETS "A" AND "B" SHALL BE USED ONLY WHEN OUTLETTING TO A STRUCTURE HAVING A SUMP OR WHEN OUTLETTING TO A DITCH

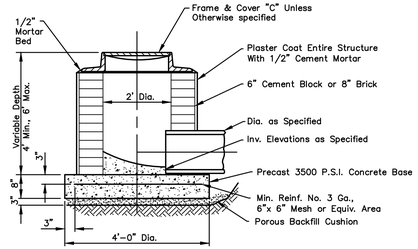

CROSS-SECTION

STANDARD INLET "A"
Scale: 1/2"=1'

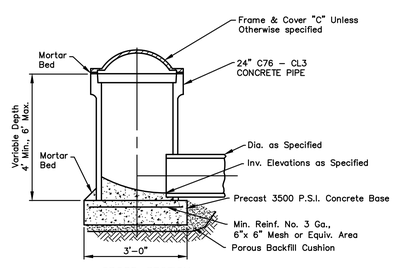

CROSS-SECTION

STANDARD INLET "B"
Scale: 1/2"=1'

NOTE:
NO OPENING SHALL BE MADE IN PRECAST UNITS WHICH WOULD LEAVE LESS THEN 24" OF UNDISTURBED PRECAST PIPE OR WOULD REMOVE MORE THEN 30% OF THE CIRCUMFERENCE ALONG ANY HORIZONTAL PLANE. IF THOSE REQUIREMENT CANNOT BE FOLLOWED, THE CATCH BASIN SHALL BE BUILT OF BRICK OR BLOCK WHEN APPROVED, TO A MINIMUM OF 8" ABOVE SUCH OPENINGS.

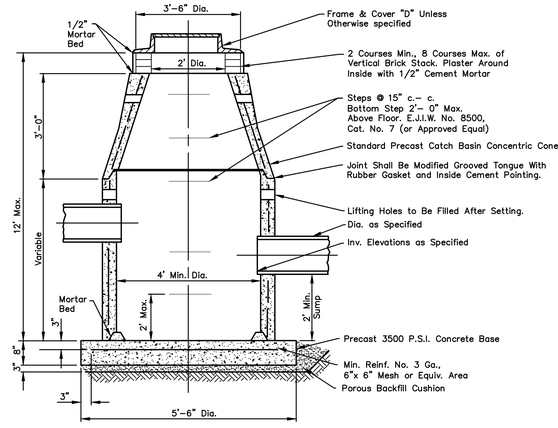

CROSS-SECTION

NOTE:
STRAIGHT PORTION OF CATCH BASIN MAY BE BUILT OUT OF BLOCK.

CATCH BASIN "B"
Scale: 1/2"=1'

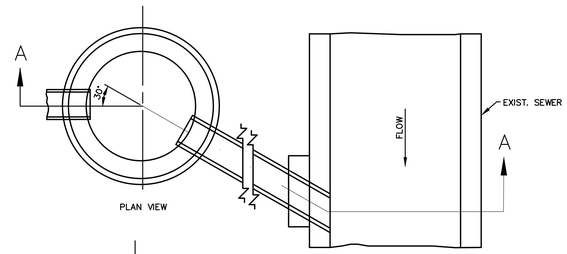

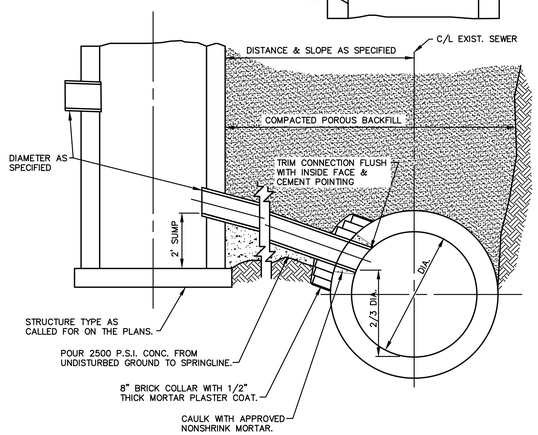

SECTION A-A
Scale: 3/8"=1'

SPECIAL CONNECTIONS TO EXISTING SEWERS

NOTE:
"BLIND TAP" STYLE OF PIPE CONNECTION ONLY TO BE USED WITH PERMISSION FROM THE CITY ENGINEER. FOR MAINTENANCE PURPOSES, MANHOLES ARE TO BE USED IF POSSIBLE.

NOTE:
WHERE EXCAVATION OCCURS UNDER OR WITHIN 3' OF EXISTING OR PROPOSED ROAD PAVEMENT, CURBS, DRIVEWAY OR SIDEWALK, ALL WORK SHALL BE DONE IN ACCORDANCE WITH THE SPECIFICATIONS OF THE CITY OF LIVONIA.

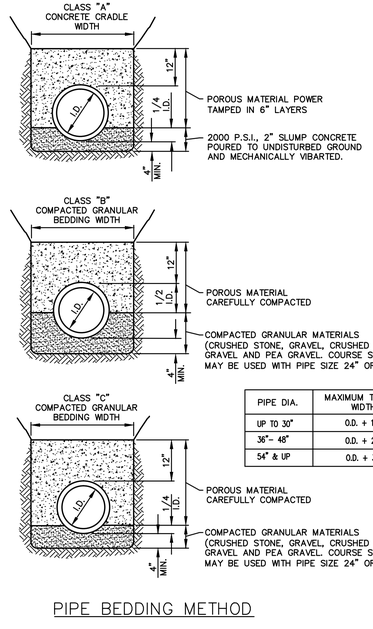

PIPE DIA.	MAXIMUM TRENCH WIDTH
UP TO 30"	O.D. + 16"
36"- 48"	O.D. + 2'
54" & UP	O.D. + 3'

PIPE BEDDING METHOD

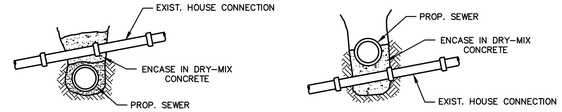

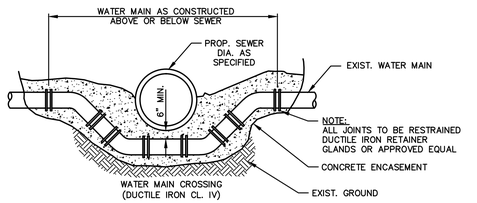

UTILITY CROSSINGS

Storm Sewer Details and Appurtenances

JOB No.

DATE: 02/1992
SHEET 2 OF 2
CADD: dwl
ENG: dwl
PM: tz
TECH:
FB#: Storm Manhole Details.dwg

REVISIONS:	REV. DATE
Pipe Bedding Revisions	7/10/80
Frame & Cover "C" Revised	1/11/90
Michigan Trout Logo	10/28/02
Note Revisions	9/25/07
Blind Tap Note Addition	7/11/12

2

CITY OF LIVONIA
Department of Public Works – Engineering Division
33000 Civic Center Drive
Livonia, Michigan 48154
(734) 466-2570 Office, (734) 466-2195 Fax

RELEASED FOR :	DATE

SPECIAL CONDITIONS, REQUIREMENTS AND NOTES TO OWNER, DEVELOPER AND CONTRACTOR:

CONTRACTOR, BUILDER AND SUBCONTRACTORS INVOLVED IN ANY FORM OF CONSTRUCTION USING THESE DOCUMENTS SHALL BE INFORMED OF THE FOLLOWING RESPONSIBILITIES, PERFORMANCE CRITERIA, LIMITATIONS AND RISKS ASSOCIATED WITH CONSTRUCTION. IF THE OWNER, DEVELOPER OR CONTRACTOR IS NOT ABLE TO ACCEPT THE RESPONSIBILITIES OR PERFORMANCE CRITERIA AND LIMITATIONS, NOTIFY OUR OFFICE PRIOR TO THE START OF CONSTRUCTION. IT SHALL BE EXPRESSLY UNDERSTOOD THAT THE ENGINEER IS NOT RESPONSIBLE OR LIABLE FOR THE LACK OF PERFORMANCE OF MATERIALS, SYSTEMS OR DESIGNS NOT BEING LIMITED TO ITEMS OUTLINED BELOW. CONTRACTORS AND SUBCONTRACTORS SHALL THOROUGHLY REVIEW ALL CONDITIONS AND RESPONSIBILITIES STATED IN THESE NOTES, PLANS, SECTIONS AND DETAILS, AND SHALL NOTIFY THE ENGINEER AND OWNER IN WRITING PRIOR TO CONSTRUCTION OF ANY CONDITIONS OR RESPONSIBILITIES WHICH ARE NOT ACCEPTABLE OR NOT UNDERSTOOD.

1. PLAIN CONCRETE, REINFORCED CONCRETE, POST-TENTIONED CONCRETE OR CONCRETE MASONRY DEVELOPS CRACKS. THE CRACKS ARE DUE TO INHERENT SHRINKAGE, CREEP AND RESTRAINING EFFECTS. CRACKS ARE NORMALLY COSMETIC AND THE SYSTEM MAINTAINS SERVICEABILITY AND STRENGTH REQUIREMENTS. JOINTS MAY BE INDICATED TO CONTROL CRACKING, BUT ARE NOT MEANT TO ELIMINATE ALL MEANS TO INSURE PROPER PROTECTION AND CURING OF ALL CEMENTITOUS MATERIALS TO REDUCE CRACKING, SURFACE SPALLING OR EXTREME CRACKING MAY BE CAUSED BY POOR MATERIAL OR PLACEMENT. CONTACT OUR OFFICE FOR POSSIBLE REPAIR REQUIREMENTS.

2. FOUNDATION SETTLEMENT MAY CAUSE DISTORTION AND DISTRESS TO THE SUPPORTED STRUCTURE AS WELL AS ADJACENT UTILITIES, SLABS OR FOUNDATIONS. THE SOIL REPORT MAY INDICATE A LEVEL OF DISPLACEMENT. ATTENTION TO PROPER SOIL PREPARATION AND GRADING, AS WELL AS PROPER DRAINAGE AWAY FROM STRUCTURE IS ESSENTIAL IN REDUCING EXPECTED SETTLEMENT.

3. VARIATION IN DIMENSIONS MAY OCCUR AS A RESULT OF THERMAL INFLUENCES, NATURAL DEFLECTIONS AND/OR CAMBERS OF MEMBERS. AS A RESULT, QUANTITIES MAY VARY AND ARCHITECTURAL FINISHES MAY BE AT RISK OF COSMETIC VARIATION OR DAMAGE.

4. THE ENGINEER SHALL NOT BE RESPONSIBLE FOR VARIATIONS TO PLANS BETWEEN BID PROCESS AND FINALIZED APPROVED DOCUMENTS RELEASED FOR CONSTRUCTION. ADDITIONS AND ALTERATIONS MAY BE MADE BETWEEN RELEASE OF BID DOCUMENTS AND FINALIZED CONSTRUCTION DOCUMENTS.

5. THESE DRAWINGS HAVE BEEN PREPARED USING STANDARDS OF PROFESSIONAL CARE AND COMPLETENESS NORMALLY EXERCISED UNDER SIMILAR CIRCUMSTANCES BY REPUTABLE STRUCTURAL ENGINEERS IN THIS OR SIMILAR LOCALITIES. THEY NECESSARILY ASSUME THAT THE WORK DEPICTED WILL BE PERFORMED BY AN EXPERIENCED CONTRACTOR, SUBCONTRACTOR AND/OR WORK PERSONS WHO HAVE A WORKING KNOWLEDGE OF THE APPLICABLE CODE STANDARDS AND REQUIREMENTS AND OF INDUSTRY ACCEPTED STANDARD GOOD PRACTICE. AS NOT EVERY CONDITION OR ELEMENT IS (OR CAN BE) EXPLICITLY SHOWN ON THESE DRAWINGS. IT IS UNDERSTOOD THAT THE CONTRACTOR WILL USE INDUSTRY ACCEPTED STANDARD GOOD PRACTICE FOR ALL WORK EXPLICITLY SHOWN.

6. CALCULATION AND DESIGN OF MISCELLANEOUS NON-STRUCTURAL ITEMS, SUCH AS RAILINGS, NON-STRUCTURAL WALLS AS PREFABRICATED STRUCTURAL ITEMS, SUCH AS FLOOR AND ROOF TRUSSES, ARE NOT INCLUDED AND ARE TO BE PROVIDED BY OTHERS UNLESS SPECIFICALLY NOTED ON THESE DRAWINGS.

7. THESE DRAWINGS REPRESENT THE FINISHED STRUCTURE. THEY DO NOT INDICATE THE METHOD OF CONSTRUCTION. THE CONTRACTOR SHALL BE SOLELY RESPONSIBLE FOR CONSTRUCTION MEANS, METHODS, TECHNIQUES, SEQUENCES AND PROCEDURES. IT SHALL BE THE CONTRACTORS RESPONSIBILITY TO DESIGN AND PROVIDE ADEQUATE, SHORING, BRACING, FORM WORK, ETC.. AS REQUIRED FOR THE PROTECTION OF LIFE AND PROPERTY DURING CONSTRUCTION. CONSTRUCTION MATERIALS SHALL BE UNIFORMLY SPREAD OUT SUCH THAT DESIGN LIVE LOAD PER SQUARE FOOT AS STATED HEREIN IS NOT EXCEEDED. VISITS TO THE SITE BY THE STRUCTURAL ENGINEER SHALL NOT INCLUDE INSPECTION OF THE ABOVE ITEMS.

8. THE CONTRACTOR SHALL BE RESPONSIBLE FOR ALL EXCAVATION PROCEDURES INCLUDING SHORING AND PROTECTION OF ADJACENT PROPERTY, STRUCTURES, STREETS AND UTILITIES IN ACCORDANCE WITH THE LOCAL BUILDING DEPARTMENT. ALL WORK OR CONSTRUCTION SHALL COMPLY WITH ALL APPLICABLE BUILDING CODES, REGULATIONS AND SAFETY REQUIREMENTS.

9. THE CONTRACTOR SHALL BE RESPONSIBLE FOR VERIFICATION OF ALL DIMENSIONS, CONDITIONS AND ELEVATIONS WITH ARCHITECTURAL DRAWINGS PRIOR TO START OF CONSTRUCTION. THE CONTRACTOR SHALL INFORM THE ARCHITECT IN WRITING OF ANY DISCREPANCIES OR OMISSIONS NOTED ON THE DRAWINGS. ANY SUCH DISCREPANCY, OMISSION OR VARIATION NOT REPORTED BEFORE THE START OF CONSTRUCTION SHALL BE THE RESPONSIBILITY OF THE CONTRACTOR.

10. WHERE REFERENCE IS MADE TO VARIOUS TEST STANDARDS FOR MATERIALS, SUCH STANDARDS SHALL BE THE LATEST EDITION AND/OR ADDENDA.

11. OPTIONS ARE FOR CONTRACTORS CONVENIENCE. IF AN OPTION IS USED, THE CONTRACTOR SHALL BE RESPONSIBLE FOR ALL NECESSARY CHANGES AND SHALL COORDINATE ALL DETAILS.

12. TYPICAL DETAILS AND NOTES SHALL APPLY, THOUGH NOT NECESSARILY AT A SPECIFIC LOCATION ON PLANS. WHERE NO DETAILS ARE SHOWN, CONSTRUCTION SHALL CONFORM TO SIMILAR WORK ON THE PROJECT. DETAILS MAY ONLY SHOW ONE SIDE OF CONNECTION OR MAY OMIT INFORMATION FOR CLARITY. WHERE DISCREPANCIES OCCUR IN THESE DRAWINGS, NOTES AND DETAILS ON DRAWINGS SHALL TAKE PRECEDENCE OVER GENERAL STRUCTURAL NOTES AN TYPICAL DETAILS.

13. ALL OPENINGS ARE NOT SHOWN ON THESE DRAWINGS. ESTABLISH AND VERIFY ALL OPENINGS AND INSERTS FOR ARCHITECTURAL, MECHANICAL, PLUMBING AND ELECTRICAL WITH APPROPRIATE TRADES, DRAWINGS AND SUBCONTRACTORS PRIOR TO CONSTRUCTION. OPENINGS MAY REQUIRE ADDITIONAL REINFORCING OR SUPPORTS AS SHOWN ON TYPICAL DETAILS. IF TYPICAL DETAILS FOR ALL CONDITIONS ARE NOT INCLUDED HEREIN, IT SHALL BE THE RESPONSIBILITY OF THE CONTRACTOR TO REQUEST IN WRITING ADDITIONAL INFORMATION.

14. ALL INSPECTIONS REQUIRED BY THE BUILDING CODES, LOCAL BUILDING OFFICIALS, OR BY THESE PLANS SHALL BE PROVIDED BY AN INDEPENDENT INSPECTION COMPANY OR, THE BUILDING DEPARTMENT. INSPECTION REQUIREMENTS STATED HEREIN ARE PARTIAL. COMPLETE INSPECTIONS REQUIREMENTS SHALL BE AS DIRECTED BY THE LOCAL BUILDING DEPARTMENT. SITE VISITS BY THE ENGINEER DO NOT CONSTITUTE AN INSPECTION, UNLESS SPECIFICALLY CONTRACTED FOR.

15. SHOP DRAWINGS SHALL BE SUBMITTED FOR ALL STRUCTURAL ITEMS. SHOP DRAWINGS ARE REVIEWED ONLY FOR GENERAL COMPLIANCE WITH THE STRUCTURAL DRAWINGS. REVIEW DOES NOT INDICATE THAT THE SHOP DRAWINGS ARE CORRECT OR COMPLETE. RESPONSIBILITY FOR CORRECTNESS SHALL REST WITH THE CONTRACTOR. ANY CHANGES, SUBSTITUTIONS, OR DEVIATIONS FROM CONTRACT DRAWINGS SHALL BE CLOUDED. ANY OF THE AFOREMENTIONED SHALL NOT BE CONSIDERED APPROVED AFTER ENGINEER'S REVIEW UNLESS SPECIFICALLY NOTED ACCORDINGLY. THE SHOP DRAWINGS DO NOT SUPERSEDE OR REPLACE THE ORIGINAL CONTRACT DRAWINGS. ANY SEAL OF AN APPROPRIATELY REGISTERED ENGINEER. THE ENGINEER SHALL NOT BE RESPONSIBLE FOR THE ADEQUACY OR ENGINEERING DESIGNS PERFORMED BY OTHERS. ALLOW 5 WORKING DAYS FOR THE ENGINEER'S REVIEW. ONE COPY OF EACH SUBMITTAL WILL BE RETAINED FOR THE ENGINEER'S RECORDS.

16. IT IS THE CONTRACTOR'S RESPONSIBILITY TO PROVIDE ADEQUATE SHORING AND BRACING DURING CONSTRUCTION TO ACCOUNT FOR ALL FORCES, INCLUDING BUT NOT LIMITED TO FORCES FROM GRAVITY, EARTH, WIND AND UNBALANCED FORCES DUE TO CONSTRUCTION SEQUENCES.

17. THE STRUCTURAL INTEGRITY OF THE BUILDING SHOWN ON THESE PLANS IS DEPENDENT UPON COMPLETION ACCORDING TO PLANS AND SPECIFICATIONS. STRUCTURAL MEMBERS ARE NOT SELF BRACING AND SHALL BE SHORED AND/OR BRACED BY THE CONTRACTOR AS NECESSARY UNTIL STABILIZED BY VIRTUE OF COMPLETED CONNECTIONS.

18. FIELD MEASURE AND VERIFY ALL DIMENSIONS AND ELEVATIONS BEFORE FABRICATION.

LOADS AND REFERENCES

DESIGN LOADS

TABLE 1604.5		**OCCUPANCY CATEGORY**	II
		WIND	
FIGURE 1609.3.1	V	BASIC WIND SPEED (MPH)	115
SECTION 1609.4.3		EXPOSURE CATEGORY	B
	Iw	IMPORTANCE FACTOR	1
		ADJUSTMENT FACTOR	1.12
		SNOW	
FIGURE 1608.2	Pg	GROUND SNOW (PSF)	25.00
	Is	IMPORTANCE FACTOR	1.00
	Ce	EXPOSURE FACTOR	1.00
	Ct	THERMAL FACTOR	1.00
		ROOF DEAD LOAD (PSF)	20.00
		CEILING DEAD LOAD (PSF)	5.00
		TOTAL UNFACTORED DESIGN ROOF LOAD (PSF)	
		25 + 20 + 5 =	50
		SOILS	
		SELF SUPPORTING FOUNDATION (MINIMUM ALLOWABLE BEARING PRESSURE IN PSF)	3000
		SEISMIC	
TABLE 1604.5		RISK CATEGORY	II
	I_e	SEISMIC IMPORTANCE FACTOR	1.00
FIGURE 1613.3.1(1)	S_S	MAPPED TWO SECOND SPECTRAL RESPONSE ACCELERATION	.1g
FIGURE 1613.3.1(2)	S_1	MAPPED ONE SECOND SPECTRAL RESPONSE ACCELERATION	.04g
SECTION 1613.3.2		SITE CLASS	D
SECTION 1613.3.4	S_{DS}	SHORT PERIOD DESIGN SPECTRAL RESPONSE ACCELERATION	0.1
SECTION 1613.3.4	S_{D1}	ONE SECOND DESIGN SPECTRAL RESPONSE ACCELERATION	0.08
SECTION 1613.3.3, TABLE 1613.3.3(2)	F_A		1.6
SECTION 1613.3.3, TABLE 1613.3.3(2)	F_V		2.4
	S_{MS}	$F_A S_S$	0.16
	S_{M1}	$F_V S_1$	0.12
SECTION 1613.3.1	SDC	SEISMIC DESIGN CATEGORY	A
		NO SPECIAL ANALYSIS REQUIRED FOR SEISMIC DESIGN CATEGORY A	
		ALL LOADS ARE SUBJECT TO MODIFICATION PER REQUIREMENTS OF ASCE-7	

REFERENCES

STRUCTURAL LOADS	ASCE-7	2010
CONCRETE	ACI 301	
	ACI 318 BUILDING CODE REQUIREMENTS FOR REINFORCED CONCRETE	2010
	ACI SP 66	
	PORTLAND CEMENT ASSOCIATION "DESIGN AND CONTROL OF CONCRETE MIXTURE"	2011
MASONRY	ACI 530/ASCE 5	2013
	ACI 530.1/ASCE 6	
	NCMA TEK 3-4B " BRACING CONCRETE MASONRY WALLS DURING CONSTRUCTION"	2005
BRICK	BIA "TECHNICAL NOTES ON BRICK CONSTRUCTION"	
STEEL	AISC "SPECIFICATION FOR STRUCTURAL STEEL BUILDINGS"	13TH EDITION
WELDING	AMERICAN WELDING SOCIETY AWS D1.1/D1.1M	2015
STEEL JOISTS	STEEL JOISTS INSTITUTE "STANDARD SPECIFICATION"	2015
METAL DECK	STEEK DECK INSTITUTE	1987
WOOD	"NATIONAL DESIGN SPECIFICATION FOR WOOD CONSTRUCTION"	2015
	ANSI/AF&PA NDS	
SOILS REPORT	TO BE PROVIDED BY DEVELOPER	

TOOLING AND EQUIPMENT INTERNATIONAL FOUNDRY ADDITION

12550 AND 12560 TECH CENTER DRIVE, LIVONIA, MI

ENGINEERING BY:
GODWIN + ASSOCIATES
architects & engineers
1200 E. Woodhurst, D - 100 Springfield, Missouri 65804
(417) 887-2607 Fax (417) 887-2615

GAC

HOPPE DESIGN, LLC
47032 McBRIDE BELLEVILLE, MI 48111
734-218-2402

REVISIONS

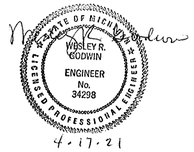

PROJECT: 2003
DATE: 12.11.20
DRAWN: JAG
CHECKED: WRG

S001

STATEMENT OF SPECIAL INSPECTIONS

STEEL CONSTRUCTION (TABLE 1704.3)	FREQUENCY CONT-INOUS	FREQUENCY PERI-ODIC	REFERENCE CRITERIA REFERENCED STANDARD	IBC REF'RENCE
1. MATERIAL VERIFICATION OF HIGH-STRENGTH BOLTS, NUTS, AND WASHERS:				
A. IDENTIFICATION MARKINGS TO CONFORM TO ASTM STANDARDS SPECIFIED IN THE APPROVED CONSTRUCTION DOCUMENTS	---	X	APPLICABLE ASTM MATERIAL SPECIFICATIONS; AISC 360, SECTION A3.3	---
B. MANUFACTURER'S CERTIFICATE OF COMPLIANCE REQUIRED	---	X	---	---
2. INSPECTION OF HIGH-STRENGTH BOLTING				
A. SNUG TIGHT JOINTS	---	X		
B. SLIP-CRITICAL CONNECTIONS WITH MATCHMARKING, TWIST OFF BOLT OR DIRECT TENSION INIDICATOR	X	X	AISC 360, SECTION M2.5	1704.3.3
C. SLIP-CRITICAL CONNECTIONS WITHOUT MATCHMARKING OR CALIBRATED WRENCH METHODS	X			
3. MATERIAL VERIFICATION OF STRUCTURAL STEEL				
A. IDENTIFICATION MARKINGS TO CONFORM TO AISC 360	---	X	AISC 360, SECTION M5.5	
B. FOR OTHER STEEL INDENTIFICATION MARKINGS TO CONFORM TO ASTM STANDARDS SPECIFIED IN THE APPROVED CONSTRUCTION DOCUMENTS		X	APPLICABLE ASTM MATERIAL STANDARDS	
C. MANUFACTURER'S CERTIFIED MILL TEST REPORTS	---	X		
4. MATERIAL VERFICATION OF WELD FILLER MATERIALS				
A. IDENTIFICATION MARKINGS TO CONFORM TO AWS SPECIFICATION IN THE APPROVED CONSTRUCTION DOCUMENTS	---	X	AISC 360, SECTION A3.5 AND APPLICABLE AWS A5 DOCUMENTS	---
MANUFACTURER'S CERTIFICATE OF COMPLIANCE REQUIRED	---	X	---	---
5. INSPECTION OF WELDING				
A. STRUCTURAL STEEL AND COLD FORMED STEEL DECK	---	---		
1) COMPLETE AND PARTIAL PENETRATION GROOVE WELDS	X	---		
2) MULTIPASS FILLET WELDS	X	---		
3) SINGLE-PASS FILLET WELDS < 5/16"	X	---	AWS D1.1	1704.3.1
4) PLUG AND SLOT WELDS	X			
5) SINGLE-PASS FILLET WELDS < 5/16"	---	X		
5) FLOOR AND ROOF DECK WELDS	---	X	AWS D1.3	---
B. REINFORCING STEEL:				
1) VERIFICATION OF WELDABILITY OF REINFORCING STEEL OTHER THAN ASTM A 706	---	X		
2) REINFORCING STEEL-RESISTING FLEXURAL AND AXIAL FORCES IN INTERMEDIATE AND SPECIAL MOMENT FRAMES, AND BOUNDARY ELEMENTS OF SPECIAL REINFORCED CONCRETE SHEAR WALLS AND SHEAR REINFORCEMENT	X	---	AWS D1.4 ACI 318: 3.5.2	---
3) SHEAR REINFORCEMENT	X	---		
4) OTHER REINFORCING STEEL	---	X		
6. INSPECTION OF STEEL FRAME JOINT DETAILS FOR COMPLIANCE WITH APPROVED CONSTUCTION DOCUMENTS:	---	X		
A. DETAILS SUCH AS BRACING AND STIFFENING	---	X	---	1704.3.2
B. MEMBER LOCATIONS	---	X		
C. APPLICATION OF JOINT DETAILS AT EACH CONNECTION	---	X		

REQUIRED VERIFICATION AND INSPECTION OF CONCRETE CONSTRUCTION (TABLE 1704.4)	FREQUENCY CONT-INOUS	FREQUENCY PERI-ODIC	REFERENCE CRITERIA REFERENCED STANDARD	IBC SECTION
1. INSPECTION OF REINFORCING STEEL AND PLACEMENT	---	X	ACI 318: 3.5, 7.1-7.7	1913.4
2. INSPECTION OF REINFORCING STEEL WELDING IN ACCORDANCE WITH TABLE 1704.3, ITEM 5B	---	---	AWS D1.4 ACI 318: 3.5.2	---
3. INSPECT BOLTS TO BE INSTALLED IN CONCRETE PRIOR TO AND DURING PLACEMENT OF CONCRETE WHERE ALLOWABLE LOADS HAVE BEEN INCREASED	X	---	ACI 318: 8.13, 21.2.8	1911.5, 1912.1
4. INSPECTION OF ANCHORS INSTALLED IN HARDENED CONCRETE		X	ACI 318;3.8.6, 8.1.3, 21.2.8	1912.1
5. VERIFYING USE OF REQUIRED DESIGN MIX	---	X	ACI 318: CH. 4, 5.2-5.4	1904.3, 1913.2, 1913.3
6. AT THE TIME FRESH CONRETE IS SAMPLED TO FABRICATE SPECIFIMENS FOR STRENGTH TESTS, PERFORM SLUMP AND AIR CONTENT TESTS, AND DETERMINE THE TEMPERATURE OF THE CONCRETE	X	---	ASTM C 172 ASTM C 31 ACI 318: 5.6, 5.8	1913.1
7. INSPECTION OF CONCRETE PLACEMENT FOR PROPER APPLICATION TECHNIQUES	X	---	ACI 318: 5.9, 5.10	1913.6, 1913.7, 1913.8
8. INSPECTION FOR MAINTENANCE OF SPECIFIED CURING TEMPERATURE AND TECHNIQUES	---	X	ACI 318: 5.11-5.13	1913.9
9. INSPECT FORMWORK FOR SHAPE, LOCATION AND DIMENSIONS OF THE CONCRETE MEMBER BEING FORMED	---	X	ACI 318: 6.1.1	---

LEVEL 1 SPECIAL INSPECTION (TABLE 1704.5.1) INSPECTION TASK	FREQUENCY CONT-INOUS	FREQUENCY PERI-ODIC	REFERENCE CRITERIA OBC SECTION	ACI 530/ ASCE 5/ TMS 402	ACI 530.1/ ASCE 6/ TMS 602
1. AS MASONRY CONSTRUCTION BEGINS, THE FOLLOWING SHALL BE VERIFIED TO ENSURE COMPLIANCE:					
A. PROPORTIONS OF SITE-PREPARED MORTAR	---	X	---	---	ART. 2.6a
B. CONSTRUCTION OF MORTAR JOINTS	---	X	---	---	ART. 3.3B
C. LOCATION OF REINFORCEMENT, CONNECTORS AND ANCHORAGES	---	X	---	---	ART. 3.4, 3.6A
2. THE INSPECTION PROGRAM SHALL VERIFY:					
A. SIZE AND LOCATION OF STRUCTURAL ELEMENTS	---	X	---	---	ART. 3.3F
B. TYPE, SIZE AND LOCATION OF ANCHORS, INCLUDING OTHER DETAILS OF ANCHORAGE OF MASONRY TO STRUCTURAL MEMBERS, FRAMES OR OTHER CONSTRUCTION	---	X	---	SEC. 1.2.2(E), 1.16.1	---
C. SPECIFIED SIZE, GRADE AND TYPE OF REINFORCEMENT	---	X	---	SEC. 1.15	ART. 2.4, 3.4
D. WELDING OF REINFORCING BARS	X	---	---	SEC. 2.1.9.7.2, 3.3.3.4(B)	---
E. PROTECTION OF MASONRY DURING COLD WEATHER (TEMPERATURE BELOW 40 DEG F) OR HOT WEATHER (TEMPERATURE ABOVE 90 DEG F)	---	X	SEC. 2104.3, 2104.4	---	ART. 1.8C, 1.8D
3. PRIOR TO GROUTING, THE FOLLOWING SHALL BE VERIFIED TO ENSURE COMPLIANCE:					
A. GROUT SPACE IS CLEAN	---	X	---	---	ART. 3.2D
B. PLACEMENT OF REINFORCEMENT AND CONNECTORS	---	X	---	SEC. 1.13	ART 3.4
C. PROPORTIONS OF SITE-PREPARED GROUT	---	X	---	---	ART. 2.6B
D. CONSTRUCTION OF MORTAR JOINTS	---	X	---	---	ART . 3.3B
4. GROUT PLACEMENT SHALL BE VERIFIED TO ENSURE COMPLIANCE WITH CODE AND CONSTRUCTION DOCUMENT PROVISIONS	X	---	---	---	ART 3.5
5. PREPARATION OF ANY REQUIRED GROUT SPECIMENS, MORTAR SPECIMENS AND/OR PRISMS SHALL BE OBSERVED	---	---	SEC. 2105.2.2, 2105.3	---	ART. 1.4
6. COMPLIANCE WITH REQUIRED INSPECTION PROVISIONS OF THE CONSTRUCTION DOCUMENTS AND THE APPROVED SUBMITTALS SHALL BE VERIFIED	---	X	---	---	ART. 1.5

REQUIRED VERIFICATION AND INSPECTION OF SOILS (TABLE 1704.7)	FREQUENCY CONT-INOUS	FREQUENCY PERI-ODIC
VERIFICATION AND INSPECTION		
1. VERIFY MATERIALS BELOW FOOTINGS ARE ADEQUATE TO ACHIEVE THE DESIGN BEARING CAPACITY	---	X
2. VERIFY EXCAVATIONS ARE EXTENDED TO PROPER DEPTH AND HAVE REACHED PROPER MATERIAL	---	X
3. PERFORM CLASSIFICATION AND TESTING OF COMPACTED FILL MATERIALS	---	X
4. VERIFY USE OF PROPER MATERIALS, DENSITIES AND LIFT THICKNESSES DURING PLACEMENT AND COMPACTION OF COMPACTED FILL	X	---
5. PRIOR TO PLACEMENT OF CONTROLLED FILL, OBSERVE SUBGRADE AND VERIFY THAT SITE HAS BEEN PREPARED PROPERLY	---	X

TOOLING AND EQUIPMENT INTERNATIONAL
FOUNDRY ADDITION
12550 AND 12560 TECH CENTER DRIVE, LIVONIA, MI

ENGINEERING BY:
GODWIN + ASSOCIATES
architects & engineers
1200 E. Woodhurst, D - 100, Springfield, Missouri 65804
(417) 887-2667 Fax (417) 887-2213

HOPPE DESIGN, LLC
47032 McBRIDE, BELLEVILLE, MI 48111
734-218-2492

REVISIONS

STATE OF MICHIGAN
WESLEY R. GODWIN
ENGINEER
No. 34298
LICENSED PROFESSIONAL ENGINEER
4-17-21

PROJECT: 2003
DATE: 12.11.20
DRAWN: JAG
CHECKED: WRG

S002

FOUNDATIONS:

1. GEOTECHNICAL REPORT:

2. THE OWNER SHALL EMPLOY A GEOTECHNICAL ENGINEER TO PROVIDE SOIL TESTING AND REVIEW DURING CONSTRUCTION. THE GEOTECHNICAL ENGINEER SHALL REVIEW AND APPROVE THE FOUNDATION REQUIREMENTS OF THE CONTRACT DOCUMENTS. IF CONDITIONS VARY FROM THAT INDICATED HEREIN, THEN THE GOETECHNICAL ENGINEER SHALL NOTIFY THE OWNER'S REPRESENTATIVE PRIOR TO FOUNDATION CONSTRUCTION.

3. THE BACKFILL SHALL BE PLACED AND COMPACTED ON EACH SIDE OF FOUNDATION WALLS SUCH THAT NO UNBALANCED LATERAL LOADS ARE INDUCED TO THE WALL.

4. BACKFILL SHALL BE PLACED EVENLY AGAINST EACH SIDE OF SUBGRADE STRUCTURAL ELEMENTS TO PRODUCE APPROXIMATELY EQUAL AND OPPOSITE LATERAL PRESSURES.

5. ALL FOOTINGS SHALL BEAR ON UNDISTURBED SOIL, HAVING A MINIMUM SAFE BEARING CAPACITY AS NOTED IN THE MATERIALS SECTION. THE TESTING AND INSPECTION AGENCY SHALL VERIFY SOIL BEARING CAPACITY AT EACH FOOTING PRIOR TO INSTALLATION OF FOOTING. NOTIFY ENGINEER OF ANY VARIATION FROM ANTICIPATED BEARING CAPACITY FOR APPROPRIATE RE-DESIGN OR LOWERING OF FOOTING.

6. THE BOTTOMS OF ALL EXTERIOR FOOTINGS SHALL BE 3'-6" MINIMUM BELOW FINISHED GRADE. IF THE BUILDING WILL BE UNDER CONSTRUCTION DURING FREEZING WEATHER, ALL INTERIOR FOUNDATIONS SHALL BE DEPRESSED 3'-6" BELOW CONSTRUCTION GRADE FOR FROST PROTECTION. IF SUCH ADDITIIONAL FOOTING DEPTH WILL CAUSE UNDERMINING OF ADJACENT EXISTING FOOTINGS OR STRUCTURES, PROVIDE APPROPRIATE SHORING, BRACING OR UNDERPINNING AS REQUIRED OR LEAVE FOOTING ELEVATION AS DESIGNED AND PROVIDE CONTINUED PROTECTION AND HEAT TO PREVENT FORMATION OF FROST BELOW FOOTING AND ADJACENT TO FOOTING.

7. THE CONTRACTOR SHALL SAFEGUARD AND PROTECT ALL EXCAVATIONS AND ADJACENT STRUCTURES, PAVEMENTS, AND UTILITIES. ALL EXCAVATIONS SHALL BE KEPT FREE OF WATER. THE CONTRACTOR IS RESPONSIBLE FOR THE DESIGN, INSTALLATION, MAINTENANCE AND REMOVAL OF ALL SHORING, BRACING, AND DEWATERING THAT IS REQUIRED TO PROPERLY CONSTRUCT THE FOUNDATIONS AND PROTECT ADJACENT STRUCTURES, PAVEMENTS AND UTILITIES.

SLAB ON GRADE:

1. TYPICAL CONCRETE SLAB ON GRADE SHALL BE 4" THICK WITH 6X6 W1.4xW1.4 WWF REINFORCEMENT OVER 10-MIL VISQUEEN VAPOR BARRIER, UNLESS OTHERWISE REQUESTED BY GEOTECHNICAL REPORT.

2. SLAB-ON-GRADE SUPPORT: 4 INCH MINIMUM LAYER OF GRANULAR BASE CONSISTING OF AN OPEN GRADED CRUSHED STONE (ASTM C33 OR SIMILAR), PER SOIL REPORT.

3. UNLESS NOTED OTHERWISE IN THE GEOTECHNICAL REPORT, CONCRETE SLABS ON GRADE SHALL BE SUPPORTED ON SELECT FILL MATERIALS AS NOTED ABOVE. FILL MATERIAL SHOULD BE MOISTENED, BUT NOT SATURATED JUST PRIOR TO PLACING CONCRETE. CARE SHALL BE TAKEN IN PLACING SLABS ON GRADE SO AS NOT TO DISTURB FILL MATERIAL OR REINFORCING. THE FILL MATERIAL SHALL BE COMPACTED TO NO LESS THAN 95% COMPACTION @ MOISTURE CONTENT RANGE OF 3% BELOW TO 3% ABOVE OPTIMUM MOISTURE CONTENT BEFORE PLACEMENT OF SLABS.

SHALLOW SPREAD FOOTINGS:

1. MINIMUM BEARING DEPTH OF EXTERIOR FOUNDATIONS IS 48" BELOW FINISH FLOOR, UNLESS SPECIFIED BY GEOTECHNICAL REPORT.

2. ALLOWABLE FOOTING BEARING IS 1500 PSF FOR CONTINUOUS AND 1500 PSF FOR ISOLATED FOOTINGS, UNLESS SPECIFIED BY GEOTECHNICAL REPORT.

3. ALL FOOTINGS SHALL BE EXTENDED TO DEPTH NOTED ABOVE U.N.O. ON PLANS OR DETAIL. GRADE IS DEFINED AS TOP OF SLAB FOR INTERIOR FOOTINGS, AND LOWEST ADJACENT COMPACTED SUBGRADE (PAD GRADE BEFORE LANDSCAPING) OR NATURAL GRADE WITHIN 5 FEET OF BUILDING FOR PERIMETER FOOTINGS. GRADE IS DEFINED AS TOP OF EXTERIOR PAVING OR CONCRETE WHERE EXTERIOR PAVING OR CONCRETE IS PERMANENTLY LOCATED DIRECTLY ADJACENT TO BUILDING AND EXTENDS AT LEAST 5 FEET FROM BUILDING. FOOTING EXCAVATIONS SHALL BE CLEAN AND FREE FROM LOOSE DEBRIS, STANDING WATER, OR UNCOMPACTED MATERIAL AT TIME OF PLACING CONCRETE.

4. EXCAVATION FOR FOOTINGS SHALL BE CUT TO ACCURATE SIZE AND DIMENSIONS AS SHOWN ON PLANS. ALL SOIL BELOW SLABS AND FOOTINGS SHALL BE PROPERLY COMPACTED AND SUBGRADE BROUGHT TO A REASONABLE TRUE AND LEVEL PLANE BEFORE PLACING CONCRETE.

5. SITE PREPARATION AND GRADING REQUIREMENTS SHALL BE COMPLETED PRIOR TO CONSTRUCTION OF FOUNDATIONS, ANY TESTS, INSPECTIONS, FIELD OBSERVATIONS, OR APPROVAL FROM THE GEOTECHNICAL ENGINEER SHALL BE PERFORMED PRIOR TO PLACEMENT OF FOUNDATION REINFORCING STEEL OR CONCRETE. ALTERATIONS TO SITE PREPARATION OR GRADING SHALL BE REPORTED TO THE ENGINEER PRIOR TO FOUNDATION CONSTRUCTION.

CONCRETE:

1. MINIMUM 28 DAY STRENGTH (f'c) SHALL BE AS FOLLOWS:

FOUNDATIONS	3500 PSI, W/C = .45 BY WEIGHT
SLABS ON GROUND	4000 PSI, W/C = .45 BY WEIGHT (INTERIOR)
	3000 PSI, W/C = .45 BY WEIGHT (EXTERIOR)

2. CONCRETE MIXES SHALL BE DESIGNED BY A CERTIFIED LABORATORY AND APPROVED BY THE ENGINEER.

3. ALL CONCRETE SHALL BE REGULAR WEIGHT OF 145 TO 150 POUNDS PER CUBIC FOOT USING HARDROCK AGGREGATES. AGGREGATE USED IN CONCRETE SHALL CONFORM TO ASTM C33, CONCRETE AGGREGATES.

4. MAXIMUM SLUMP FOR EXTERIOR SLABS SHALL BE 5 INCHES. MAXIMUM SLUMP FOR ALL OTHER CONCRETE SHALL BE 4 INCHES. WATER SHALL BE CLEAN AND POTABLE. IF ADDITIONAL FLOWABILITY IS REQUIRED FOR PLACEMENT OF ANY CONCRETE MIX, A WATER-REDUCING ADDITIVE CONFORMING TO ASTM C494, TYPE A, SHALL BE USED. NO ADDITIONAL WATER MAY BE ADDED TO THE MIX. SEE DIVISION 3 SPECIFICATIONS FOR ADDITIONAL REQUIREMENTS.

5. PORTLAND CEMENT SHALL CONFORM TO ASTM C 150. TYPE II CEMENT WITH A MAXIMUM CHLORIDE ION, PERCENT BY WEIGHT OF CEMENT, SHALL NOT EXCEED 0.05

6. NO MORE THAN 90 MINUTES SHALL ELAPSE BETWEEN BATCHING AND CONCRETE PLACEMENT, UNLESS APPROVED BY THE ENGINEER OR AUTHORIZED TESTING AGENCY.

7. CONCRETE MIXING, PLACEMENT AND QUALITY SHALL BE PER ASTM C 94, ASTM C 685, AND ACI 302. MECHANICALLY VIBRATE ALL CONCRETE WHEN PLACED, EXCEPT SLABS ON GRADE NEED ONLY BE VIBRATED OR THOROUGHLY RODDED AROUND EMBEDDED STRAPS OR HARDWARE, BOLTS FOR HOLDOWNS, PT ANCHORAGES (AS OCCUR), CURBS AND EDGES OF SLAB STEPS AND UNDER FLOOR DUCTS OR SIMILAR ELEMENTS. REMOVE ALL DEBRIS FROM FORMS BEFORE PLACING CONCRETE. CONCRETE SHALL NOT BE DROPPED THROUGH REINFORCING STEEL (AS IN WALLS AND COLUMNS SO AS TO CAUSE SEGREGATION OF AGGREGATES.) UNCONFINED FALL SHALL NOT EXCEED 5 FEET. CARE SHALL BE TAKEN IN PLACING SLABS ON GRADE SO AS CONCRETE DOES NOT DISTURB FILL MATERIAL.

8. ALL ITEMS TO BE CAST IN CONCRETE SUCH AS REINFORCING, DOWELS, BOLTS, ANCHORS, SLEEVES, ETC. SHALL BE SECURELY POSITIONED IN THE FORMS BEFORE PLACING THE CONCRETE.

9. CONCRETE SLAB ON GRADE CONTROL JOINTS SHALL BE AS SHOWN ON THE FOUNDATION PLAN OR TYPICAL DETAILS WHERE CONTROL JOINTS ARE NOT SHOWN ON PLANS ALL CONCRETE SLABS ON GRADE SHALL BE BOUNDED BY KEYED, DOWELED OR SAW-CUT CONTROL JOINTS SUCH THAT THE ENCLOSED AREA DOES NOT EXCEED 900 SQUARE FEET. RATIO OF BOUNDARY DIMENSIONS SHALL NOT EXCEED 1:5:1, KEYED OR DOWELED CONTROL JOINTS NEED ONLY OCCUR AT EXPOSED EDGES DURING POURING. ALL OTHER JOINTS MAY BE SAW CUT.

10. CONCRETE OVER STEEL DECK SHALL BE BOUNDED BY KEYED OR SAW-CUT CONTROL JOINTS SUCH THAT THE ENCLOSED AREA DOES NOT EXCEED 600 SQUARE FEET. RATIO OF BOUNDARY DIMENSIONS SHALL NOT EXCEED 1:5:1 MINIMUM REINFORCING UNLESS NOTED OTHERWISE ON PLANS SHALL BE 6X6 W2.9xW2.9 WWF PLACED AT THE APPROXIMATE CENTER OF THE CONCRETE DEPTH OVER THE DECK.

11. CONSTRUCTION JOINTS OR POUR JOINTS IN STRUCTURAL ELEMENTS (BEAMS, COLUMNS, ELEVATED SLABS, ETC.) NOT SPECIFICALLY SHOWN OR NOTED ON THE DRAWINGS REQUIRE PROPER APPROVAL OF THE ENGINEER, CONTRACTOR SHALL SUBMIT SHOP DRAWINGS SHOWING PROPOSED JOINTS TO ENGINEER FOR APPROVAL,

12. PIPES OTHER THAN ELECTRICAL CONDUITS SHALL NOT BE EMBEDDED IN STRUCTURAL CONCRETE EXCEPT WHERE SPECIFICALLY APPROVED BY THE ENGINEER. MAXIMUM PIPE SIZE SHALL BE ⅓ OF THE SLAB THICKNESS AND LOCATED AT THE MID-DEPTH. MINIMUM SPACING SHALL BE 3 TIMES THE PIPE DIAMETER. PIPES SHALL NOT IMPAIR THE STRENGTH OF THE MEMBER.

13. PROTECT CONCRETE FROM DAMAGE OR REDUCED STRENGTH DUE TO COLD OR HOT WEATHER IN ACCORDANCE WITH ACI 305 AND 306 AND UBC SECTION 1905.

14. WHERE DOWELS, BOLTS, OR INSERTS ARE CALLED TO BE ANCHORED TO CAST IN PLACE CONCRETE ELEMENTS USING EPOXY ADHESIVES, USE ANCHORAGE SYSTEM EQUAL TO THE "HILTI" HIT DOWELING (HY-150). FOLLOW ALL MANUFACTURERS RECOMMENDATIONS. ALTERNATE ANCHORAGE SYSTEMS MAY BE USED WITH ENGINEERS PRIOR APPROVAL.

CONCRETE TESTING:

1. TESTING SERVICES: TESTING OF COMPOSITE SAMPLES OF FRESH CONCRETE OBTAINED ACCORDING TO ASTM C 172 SHALL BE PERFORMED ACCORDING TO THE FOLLOWING REQUIREMENTS:
   A. TESTING FREQUENCY: OBTAIN ONE COMPOSITE SAMPLE FOR EACH DAY'S POUR OF EACH CONCRETE MIX EXCEEDING 5 CU. YD. (4 CU. M), BUT FOR LESS THAN 25 CU. YD. (19 CU. M), PLUS ONE SET FOR EACH ADDITIONAL 50 CU. T. (38 CU. M) OR FRACTION THEREOF.

2. WHEN FREQUENCY OF TESTING WILL PROVIDE FEWER THAN FIVE COMPRESSIVE-STRENGTH TESTS FOR EACH CONCRETE MIX, TESTING SHALL BE CONDUCTED FROM AT LEAST FIVE RANDOMLY SELECTED BATCHES OR FROM EACH BATCH IF FEWER THAN FIVE ARE USED

3. SLUMP: ASTM C 143; ONE TEST AT POINT OF PLACEMENT FOR EACH COMPOSITE SAMPLE, BUT NOT LESS THAN ONE TEST FOR EACH DAY'S POUR OF EACH CONCRETE MIX. PERFORM ADDITIONAL TESTS WHEN CONCRETE CONSISTENCY APPEARS TO CHANGE.

4. AIR CONTENT: ASTM C 231, PRESSURE METHOD, FOR NORMAL-WEIGHT CONCRETE; ASTM C 173, VOLUMETRIC METHOD FOR STRUCTURAL LIGHTWEIGHT CONCRETE; ONE TEST FOR EACH COMPOSITE SAMPLE, BUT NOT LESS THAN ONE TEST FOR EACH DAY'S POUR OF EACH CONCRETE MIX.

5. CONCRETE TEMPERATURE: ASTM C 1064; ONE TEST HOURLY WHEN AIR TEMPERATURE IS 40 DEG F (4.4 DEG C) AND BELOW AND WHEN 80 DEG F (27 DEG C) AND ABOVE, AND ONE TEST FOR EACH COMPOSITE SAMPLE.

6. COMPRESSION TEST SPECIMENS: ASTM C 31/C 31M; CAST AND LABORATORY CURE ONE SET OF FOUR STANDARD CYLINDER SPECIMENS FOR EACH COMPOSITE SAMPLE. FIELD-CURED SPECIMENS BELOW MAY BE REQUIRED TO VERIFY ADEQUACY OF CURING AND PROTECTION OF CONCRETE OR TO VERIFY STRENGTH FOR REMOVAL OF SHORING AND RESHORING IN MULTISTORY.

7. COMPRESSIVE-STRENGTH TESTS: ASTM C 39; TEST TWO LABRATORY-CURED SPECIMENS AT 7 DAYS AND TWO AT 28 DAYS. A COMPRESSIVE-STRENGTH TEST SHALL BE THE AVERAGE COMPRESSIVE STRENGTH FROM TWO SPECIMENS OBTAINED FROM SAME COMPOSITE SAMPLE AND TESTED AT AGE INDICATED.

STRUCTURAL STEEL:

1. STRUCTURAL STEEL MEMBERS SHALL CONFORM WITH THE FOLLOWING STANDARDS AND MATERIAL PROPERTIES UNLESS NOTED OTHERWISE:

SHAPE	STANDARD	FY
ROLLED WIDE FLANGE SECTIONS:	ASTM A992	50 KSI
OTHER STANDARD STEEL SHAPES AND ROLLED SECTIONS:	ASTM A36	36 KSI
BARS AND PLATES:	ASTM A36	36 KSI
TUBES:	ASTM A500	46 KSI
PIPE:	ASTM A53 GR.B OR A5000 GR.B	36 KSI 42 KSI
BOLTS AT STEEL CONNECTIONS:	ASTM A325 OR A490	-----

2. ALL BOLTS SHALL BE INSTALLED AS BEARING-TYPE CONNECTIONS WITH THREADS EXCLUDED FROM SHEAR PLANE (TYPE "X" CONNECTION). UNLESS NOTED OTHERWISE. HIGH-STRENGTH SHALL BE TIGHTENED USING ANY AISC APPROVED METHOD.

3. ALL THREADED ROD, THREADED, STUDS, FOUNDATION ANCHOR BOLTS, AND ALL BOLTED CONNECTIONS INVOLVING WOOD MEMBERS SHALL BE ASTM A-307 UNLESS NOTED OTHERWISE. ALL EXPANSION OR EPOXY BOLTS SHALL HAVE CURRENT ICBO RATING FOR MATERIAL INTO WHICH INSTALLATION OCCURS. HEADED STUDS SHALL CONFORM TO ALL REQUIREMENTS OF THE LATEST EDITION OF THE "RECOMMENDED PRACTICES FOR STUD AND WELDING" AND THE "STRUCTURAL WELDING CODE" PUBLISHED BY AMERICAN WELDING SOCIETY (AWS). ALL BOLTS, ANCHOR BOLTS, EXPANSION BOLTS ETC. SHALL BE INSTALLED WITH STEEL WASHERS AT FACE OF WOOD.

4. ALL STRUCTURAL AND MISCELLANEOUS STEEL SHALL BE FABRICATED AND ERECTED IN ACCORDANCE WITH AISC SPECIFICATIONS FOR THE DESIGN, FABRICATION AND ERECTION OF STRUCTURAL STEEL FOR BUILDINGS, LATEST EDITION.

5. WELDING SHALL BE PERFORMED BY WELDERS HOLDING VALID CERTIFICATES AND HAVING CURRENT EXPERIENCE IN THE TYPE OF WELDING SHOWN ON THE DRAWINGS. ALL WELDING SHALL USE E70 SERIES LOW HYDROGEN ELECTRODES UNLESS OTHERWISE NOTED. ALL WELDS INVOLVING REINFORCING BARS SHALL USE E90 SERIES ELECTRODES. ALL WELDING SHALL CONFORM TO THE LATEST AMERICAN WELDING SOCIETY (AWS) STANDARDS WELDS ON DRAWINGS ARE SHOWN AS SHOP WELDS. CONTRACTOR MAY SHOP WELD OR FIELD WELD AT HIS DISCRETION. ALL FULL PENETRATION WELDS SHALL BE TESTED AND CERTIFIED BY AN INDEPENDENT TESTING LABORATORY.

6. IF NOTED, GROUT BENEATH COLUMN BASES OR BEARING PLATES SHALL BE 5,000 PSI (MIN) NON-SHRINK FLOWABLE GROUT OR DRYPACK. INSTALL GROUT UNDER BEARING PLATES BEFORE FRAMING MEMBER IS INSTALLED. AT COLUMNS, INSTALL GROUT UNDER BASE PLATES AFTER COLUMN HAS BEEN PLUMED BUT PRIOR TO ROOF INSTALLATION. GROUT DEPTH SHALL BE SUFFICIENT TO ALLOW GROUT OR DRYPACK TO BE PLACED BENEATH PLATE WITHOUT VOIDS.

7. DETAILS OUTLINE BASIC CONNECTION TYPES. BEAM TO BEAM AND BEAM TO COLUMN CONNECTIONS NOT DETAILED IN DRAWINGS SHALL BE SIZED BY STEEL DETAILER AS STANDARD AISC, TYPE 2, BEARING CONNECTIONS CAPABLE OF SUPPORTING REACTIONS DEVELOPED BY MAXIMUM UNIFORM LOAD CAPACITY ON A SIMPLE SPAN FOR BEAM AND BEAM SPAN GIVEN.

8. STEEL SHALL BE DESIGNED, DETAILED, FABRICATED, AND ERECTED ACCORDING TO ALL APPLICABLE SECTIONS OF THE LATEST EDITION OF THE AISC MANUAL OF STEEL CONSTRUCTION. SHOP DRAWINGS SHALL BE SUBMITTED INDICATING COMPLETE INFORMATION REQUIRED FOR CONSTRUCTION OF STRUCTURAL STEEL. SHOP DRAWINGS SHALL INCLUDE LAYOUT AND DIMENSIONS OF FRAMING PLANS, CONNECTION DETAILS, AND SEQUENCE, ETC. SHOP DRAWINGS AND CALCULATIONS SHALL BE SEALED BY A STRUCTURAL ENGINEER REGISTERED IN THE STATE OF THE PROJECT SITE.

9. ANY CONCENTRATED LOADING WHICH ARE TO BE ATTACHED TO ROOF OR ELEVATED FLOOR STRUCTURE SUCH AS CEILINGS, PIPE HANGARS, MECHANICAL DUCTWORK, ELECTRICAL FIXTURES, ETC. SHALL BE ATTACHED TO PANEL POINTS OF BAR JOIST. DO NOT SUSPEND FROM CEILING OR METAL DECK.

10. HEAVY LOADS THAT EXCEED 75% OF ALLOWABLE LIVE LOADS SHOWN ON THE PLANS, FOR TEMPORARY EQUIPMENT, CONSTRUCTION MATERIALS, OR OTHER LOADS NOT SHOWN IN THE CONTRACT DOCUMENTS, SHALL NOT BE PLACED OR SUPPORTED FROM ELEVATED STRUCTURE WITHOUT PRIOR WRITTEN APPROVAL OF THE STRUCTURAL ENGINEER.

11. FOUNDATION ANCHOR BOLTS SHALL BE AS CALLED OUT IN THE COLUMN TABLE AND IN BASE PLATE DETAILS, WITH LEVELING NUTS. IF NOT CALLED OUT, USE A307 ¾" DIAMETER WITH 10" EMBEDMENT AND 4" HOOK.

12. INSPECTION OF STRUCTURAL STEEL CONNECTIONS SHALL BE PERFORMED BY A QUALIFIED INSPECTOR, APPROVED BY THE ENGINEER, RETAINED BY THE CONTRACTOR AND APPROVED BY THE OWNER INSPECTOR QUALIFICATION SHALL BE BASED ON COMPLIANCE WITH APPROPRIATE PROVISIONS OF THE AWS CODE-D1.1. INSPECTION SHALL INCLUDE VISUAL INSPECTION OF ALL COMPLETED STRUCTURAL WELDED CONNECTIONS. THE INSPECTION AGENCY SHALL BE NOTIFIED BEFORE AN WELDING WORK BEGINS AND SHALL BE RESPONSIBLE FOR VERIFICATION OF WELDERS CERTIFICATIONS, INSPECTION OF CONNECTIONS BEFORE WELDING BEGINS, AND INSPECTION DURING WELDING UNTIL THE INSPECTOR IS SATISFIED THAT THE WELDING PROCESS IS BEING PERFORMED PER AWS REQUIREMENTS.

13. ALL EXPOSED STEEL SHALL BE GALVANIZED U.N.O., INCLUDING MASONRY SUPPORT LINTELS.

14. FIELD CUTTING, DRILLING OR OTHER MODIFICATION OF STRUCTURAL STEEL COMPONENTS IS NOT PERMITTED WITHOUT WRITTEN APPROVAL OF THE STRUCTURAL ENGINEER. WHERE BEAM PENETRATIONS CANNOT BE AVOIDED OR WHERE CUTTING IS REQUIRED, CONTRACTOR SHALL SUBMIT TO THE ENGINEER, ALL PERTINENT INFORMATION INCLUDING PENETRATION SHAPE, SIZE, LOCATION AND METHOD OF CUTTING THE OPENING.

15. WHERE STEEL CONNECTIONS ARE NOT FULLY DETAILED ON THE DESIGN DRAWINGS (WITH ALL REQUIREMENTS FOR BOLTS, PLATES, WELDS, DIMENSIONS, ETC SHOWN) CONNECTIONS SHALL BE DESIGNED BY THE STEEL CONTRACTOR UNDER THE SUPERVISION OF A P.E. LICENSED IN THE STATE THAT HAS JURISDICTION OVER THE PROJECT.

16. WHERE TYPICAL OR INCOMPLETE CONNECTIONS ARE SHOWN ON THE DESIGN DRAWINGS, THOSE DETAILS SHALL BE USED AS A BASIS FOR CONNECTION DESIGN TO BE COMPLETED BY THE CONTRACTOR. ALTERNATE CONNECTIONS DESIGNED BY THE STEEL CONTRACTOR WILL BE PROVIDED IF REQUIRED DESIGN FORCES CANNOT BE ACHIEVED BY THE TYPICAL OR EXAMPLE CONNECTION, OR IF AUTHORIZATION TO ALTER THE DETAIL IS PROVIDED BY THE DESIGN ENGINEER.

17. WHERE CONNECTION FORCES ARE INDICATED ON THE DRAWINGS, PROVIDE CONNECTIONS DESIGNED TO RESIST THE FORCE SHOWN.

18. WHERE CONNECTION FORCES ARE NOT INDICATED ON THE DRAWINGS, PROVIDE CONNECTIONS DESIGNED TO RESIST FORCES AS FOLLOWS:
FOR SHEAR CONNECTIONS IN NON-COMPOSITE MEMBERS, DESIGN CONNECTIONS TO RESIST 50% OF THE TOTAL ALLOWABLE UNIFORM LOAD SHOWN IN THE TABLES IN PART 3 OF THE AISC MANUAL OF STEEL CONSTRUCTION.
FOR SHEAR CONNECTIONS IN COMPOSITE MEMBERS, DESIGN CONNECTIONS TO RESIST 75% OF THE TOTAL ALLOWABLE UNIFORM LOAD SHOWN IN THE TABLES IN PART 3 OF THE AISC MANUAL OF STEEL CONSTRUCTION.
FOR MOMENT CONNECTIONS, DESIGN CONNECTIONS TO RESIST 100% OF MOMENT CAPACITY OF THE MEMBER.

STRUCTURAL STEEL CONTINUED:

19. ALL FULLY TENSIONED A325 BOLTS SHALL HAVE WASHERS BENEATH THE TURNED ELEMENT. ALL FULLY TENSIONED A490 BOLTS SHALL HAVE WASHERS BENEATH BOTH NUT AND HEAD.

20. ALL WELDS SHALL BE PROVIDED AS SHOWN IN THE STRUCTURAL DETAILS UNLESS THICKER WELD IS REQUIRED DUE TO MATERIAL THICKNESS. WHERE WELD IN NOT DETAILED, WELD SHALL BE DESIGNED BY A LICENSED ENGINEER RETAINED BY THE CONTRACTOR TO MEET CONNECTION CAPACITY REQUIREMENTS LISTED ABOVE. WELD SIZES SHALL BE INCREASED AS NEEDED TO MEET THE FOLLOWING MINIMUM WELD SIZE REQUIREMENTS BASED ON THE SMALLER MATERIAL THICKNESS OF THE PIECES OF STEEL BEING WELDED TOGETHER:

MATERIAL THICKNESS	MIN. FILLET WELD SIZE (PROVIDE LARGER WELD IF REQUIRED FOR STRESS)
¼" AND UNDER	⅛"
OVER ¼" TO ½"	3/16"
OVER ½" TO ¾"	¼"
OVER ¾"	5/16"

21. IF PENETRATIONS THROUGH WEBS OF STEEL BEAMS WILL BE REQUIRED, CONTRACTOR TO NOTIFY ENGINEER OF RECORD.

22. SEE ARCHITECTURAL DRAWINGS FOR MISCELLANEOUS AND NON-STRUCTURAL STEEL.

23. ALL ANGLES, W-SECTIONS, HSS-SECTIONS, AND PLATES ACTING AS LINTELS TO SUPPORT EXTERIOR MASONRY OR STONE TO BE GALVANIZED. ALL INTERIOR LINTELS TO BE PAINTED.

MASONRY:

1. MASONRY WALLS ARE TO BE ADEQUATELY BRACED DURING CONSTRUCTION. SEE "STANDARD PRACTICE FOR BRACING MASONRY WALLS UNDER CONSTRUCTION" BY THE COUNCIL FOR MASONRY WALL BRACING AND ALSO NCMA TEK 304B "BRACING CONCRETE MASONRY WALLS DURING CONSTRUCTION" FOR RECOMMENDATIONS REGARDING BRACING.

2. PLACE LADDER TYPE HORIZONTAL JOINT REINFORCING WITH PREFORMED LAPPED CORNER REINFORCING AT 16" OC VERTICALLY IN ALL MASONRY WALLS UNO. JOINT REINFORCING SHALL BE GALVANIZED AND HAVE SIDE WIRES OF 9 GAGE MINIMUM CONFORMING TO ASTM A-82 UNO.

3. THE DISCONTINUOUS ENDS OF ALL MASONRY WALLS SHALL BE SOLIDLY GROUTED A MINIMUM OF 8" OR ONE BLOCK CELL AND REINFORCED FOR THEIR FULL HEIGHT WITH ONE #5 BAR UNO.

4. AT GROUTED CELLS LIFTS OF GROUT SHALL BE KEYED 4" INTO THE COURSE OF MASONRY BELOW.

5. ALL CMU BOND BEAMS TO HAVE (2) #4 BARS CONTINUOUS. PROVIDE (2) #4 L BARS AT EVERY CORNER LAPPED 3'-0" WITH CONTINUOUS BARS.

6. VERTICAL CONTROL JOINTS IN CMU WALLS TO HAVE A MINIMUM ⅜" GAP AND SHALL BE LOCATED BY THE ARCHITECT, BUT NOT MOVE THAN 20'-0" OC.

7. BRICK TIES SHALL BE GALVANIZED ADJUSTABLE 2-PIECE WIRE TIES OF NOT LESS THAN 9 GAGE AND SHALL BE SPACED AT 16" OC VERTICALLY AND HORIZONTALLY.

8. WHERE MASONRY MEETS STRUCTURAL MEMBERS SUBJECT TO VERTICAL DEFLECTION, PROVIDE ALLOWANCE FOR VERTICAL MOVEMENT OF L/240 OF STRUCTURAL MEMBER.

STEEL JOISTS:

1. ALL JOISTS SHALL BE DESIGNED, FABRICATED, WELDED, AND ERECTED IN ACCORDANCE WITH THE LATEST EDITION OF THE "STANDARD SPECIFICATIONS" OF THE STEEL JOIST INSTITUTE.

2. JOIST MANUFACTURER SHALL DESIGN, AND SUBMIT CALCULATIONS BY AN APPROPRIATELY REGISTERED ENGINEER FOR ALL JOISTS AND JOISTS GIRDERS, EXCEPT PARALLEL, CHORD JOISTS WITH UNIFORM LOADS AND CONTINUOUSLY SUPPORTED COMPRESSION CHORDS PER SJI STANDARD LOAD TABLES. CALCULATIONS SHALL INCLUDE DEFLECTED AND CAMBER REQUIREMENTS. LIVE LOAD DEFLECTIONS SHALL BE LIMITED TO SPAN/360. ALL JOIST AND JOIST GIRDERS SHALL BE CAMBERED FOR THE DESIGN DEAD LOAD MANUFACTURER SHALL ADD ADDITIONAL WED MEMBERS AS REQUIRED AND ADJUST CHORD AND WEB SIZES ACCORDINGLY, BUT SHALL NOT ALTER DEPTH OF JOISTS WITHOUT APPROVAL OF THE ARCHITECT. DESIGN CALCULATIONS SHALL INCLUDE SUPERIMPOSED LOADS FROM MECHANICAL, ELECTRICAL, PLUMBING, AND OTHER ROOF-SUPPORTED EQUIPMENT. VERIFY SIZE, WEIGHT AND LOCATION OF EQUIPMENT WITH ARCHITECTURAL, MECHANICAL, PLUMBING AND ELECTRICAL DRAWINGS.

3. CONTRACTOR SHALL SUBMIT SHOP DRAWINGS ALONG WITH DESIGN CALCULATIONS SEALED BY A REGISTERED ENGINEER FOR REVIEW PRIOR TO MANUFACTURE. SHOP DRAWINGS AND CALCULATIONS SHALL INCLUDE DETAILS OF ANY OPTIONAL FIELD SPACES.

4. ALL STEEL JOISTS, GIRDERS OR BEAMS SHALL BEAR AT A PANEL POINT. JOISTS OR BEAMS SHALL BE EQUALLY SPACED BETWEEN COLUMN LINES UNLESS NOTED OTHERWISE ON PLANS. MANUFACTURER SHALL DESIGN JOIST SHOES WHERE BEARING LENGTH IS LESS THAN 4" AT LH SERIES JOIST AND LESS THAN 3" AT K SERIES JOIST.

5. MANUFACTURER SHALL PROVIDE BRIDGING AS REQUIRED PER SJI SPECIFICATIONS. WHERE BOTTOM CHORD WELD IS INDICATED ON DRAWINGS, DO NOT WELD BOTTOM CHORDS TO JOIST SUPPORT UNTIL FULL DEAD LOAD IS IN PLACE. WHERE CROSS BRIDGING INTERFERES WITH MECHANICAL INSTALLATIONS, REMOVE THE INTERFERING CROSS BRIDGING ELEMENTS AFTER TOTAL DEAD LOAD IS APPLIED AND REPLACE WITH EQUIVALENT HORIZONTAL ANGLES (L2"x2"X ⅜" MINIMUM) AT TOP AND BOTTOM CHORDS.

6. MANUFACTURER SHALL DESIGN JOIST AND JOIST GIRDERS IN ACCORDANCE WITH THE UNDERWRITER LABORATORY (U.L.) DESIGN REQUIREMENTS IN ORDER TO ACHIEVE THE FIRE RATING SPECIFIED IN ARCHITECTURAL DRAWINGS.

7. THE GENERAL CONTRACTOR SHALL COORDINATE JOIST SPACINGS WITH FLOOR PENETRATIONS FOR MECHANICAL, ELECTRICAL, PLUMBING, OR OTHER ITEMS IN THIS CONTRACT WHICH MAY CONFLICT WITH JOIST SPACINGS SHOWN. JOIST MAY BE SHIFTED TO MISS REQUIRED PENETRATIONS- ISOLATED SPACINGS (NO MORE THAN 2 ADJACENT SPACES) MAY BE INCREASED OR DECREASED BY A MAXIMUM OF 6". ANY ADJUSTMENTS MUST BE SHOWN ON BAR JOIST AND METAL DECK SHOP DRAWINGS.

8. WHERE JOIST OCCUR AT COLUMN LINES, EXTEND BOTTOM CHORD TO COLUMN AND PROVIDE A STABILIZER PLATE. DO NOT ATTACH BOTTOM CHORD TO COLUMN.

9. PROVIDE AND INSTALL BRIDGING IN ACCORDANCE WITH STEEL JOISTS INSTITUTE STANDARDS. ALL ENDS OF BRIDGING LINES TERMINATING AT MASONRY WALLS SHALL BE ANCHORED THERETO IN ACCORDANCE WITH THE MANUFACTURER'S RECOMMENDATIONS. WHERE BRIDGING DOES NOT TERMINATE AT A MASONRY WALL, THE FIRST AND SECOND BAYS FROM THE END OF THE BRIDGING IS TO BE DIAGONAL X-BRIDGING. MANUFACTURER TO PROVIDE ADDITIONAL BRIDGING AS REQUIRED TO SATISFY SJI UPLIFT REQUIREMENTS.

10. WHERE STEEL JOISTS SUPPORT MOVEABLE PARTITIONS, JOIST MANUFACTURER SHALL DESIGN JOIST FOR A MAXIMUM LIVE/SNOW LOAD DEFLECTION OF THE SMALLER OF ½" AND L/360.

11. JOIST MANUFACTURER SHALL LIMIT JOIST DEFLECTION DUE TO LIVE/SNOW LOAD TO L/360.

12. THE ENDS OF STEEL JOIST SHALL BEAR A MINIMUM DISTANCE OF 2½ INCHES OVER STEEL SUPPORTS AND 4 INCHES OVER ALL OTHER SUPPORTS. THE ENDS SHALL BE FASTENED BY BOLTING AND OR WELDING.

13. ERECTION OF JOISTS AND JOIST BRIDGING SHALL CONFORM TO ALL REQUIREMENTS OF OSHA AND JOIST MANUFACTURER.

STEEL DECK:

1. UNLESS OTHERWISE NOTED, ALL METAL DECK HAS BEEN DESIGNED TO BE CONTINUOUS OVER 3 SPANS MINIMUM AND SHALL BEAR AT LEAST 2" ON STEEL SUPPORTS. FOR ONE OR TWO SPAN CONDITIONS, THE CONTRACTOR SHALL PROVIDE SHORING AS REQUIRED OR FURNISH HIGHER GAGE DECK AS REQUIRED TO SUPPORT ALL THE APPLICABLE LOADS. CONTRACTOR SHALL SUBMIT ALTERNATE FOR APPROVAL.

2. PROVIDE REINFORCING CHANNELS, STANDARD CLOSURES, CANT STRIPS, SUMP PANS, FINISH STRIPS, POUR STOPS, AND OTHER ACCESSORIES AS REQUIRED FOR PROPERLY FINISHED JOB, EVEN IF NOT SPECIFICALLY SHOWN ON THE DRAWINGS. PROVIDE BEARING ANGLES WELDED TO COLUM

SOUTH PARTIAL FOUNDATION PLAN

Scale: 1/8" = 1'-0"

NORTH

TOOLING AND EQUIPMENT INTERNATIONAL
FOUNDRY ADDITION

12550 AND 12560 TECH CENTER DRIVE, LIVONIA, MI

ENGINEERING BY:
GODWIN + ASSOCIATES
architects & engineers
1200 E. Woodhurst, D - 100, Springfield, Missouri 65804
(417) 887-2667 Fax (417) 887-2213

HOPPE DESIGN, LLC
47032 McBRIDE, BELLEVILLE, MI 48111
734-218-2492

REVISIONS
ADD #1 05.10.21

PROJECT: 2003
DATE: 12.11.20
DRAWN: JAG
CHECKED: WRG

STATE OF MISSOURI
WESLEY R. GODWIN
ENGINEER
No. 34298
REGISTERED PROFESSIONAL ENGINEER
5-10-21

S101

PAD FOOTING SCHEDULE

MARK	FOOTING SIZE	FOOTING & PIER REINFORCING	BASE PLATE & ANCHOR BOLTS
F1	3'-0" x 3'-0" x 12"	5-#5 Each Way	10"x10"x½" Base Plate w/ (4) ½"ø A.B. x 8" w/ 3" Projection
F2	3'-6" x 3'-6" x 12"	6-#5 Each Way	10"x10"x½" Base Plate w/ (4) ½"ø A.B. x 8" w/ 3" Projection
F3	4'-0" x 6'-6" x 50"	16-#8 Short Way (4" O.C.), & 9-#4 Long Way (4" O.C.) Top & Bottom W/ #8's Vert. @ 6" O.C.	Per P.E.M.B. & Crane Manufacturer w/ (4) ¾"ø A.B. x 15" W/ 3" Projection
F4	7'-0" x 6'-6" x 50"	40-#8 Short Way (4" O.C.), & 16-#4 Long Way (4" O.C.) Top & Bottom W/ #8's Vert. @ 6" O.C.	Per P.E.M.B. & Crane Manufacturer w/ (4) ¾"ø A.B. x 15" W/ 3" Projection
F5	5'-6" x 5'-6" x 50"	15-#8 Each Way (4" O.C.) Top & Bottom W/ #8's Vert. @ 6" O.C.	Per P.E.M.B. & Crane Manufacturer w/ (4) ¾"ø A.B. x 15" W/ 3" Projection
F6	5'-6" x 6'-6" x 50"	18-#8 Short Way (4" O.C.), & 16-#4 Long Way (4" O.C.) Top & Bottom W/ #8's Vert. @ 6" O.C.	Per P.E.M.B. & Crane Manufacturer w/ (4) ¾"ø A.B. x 15" W/ 3" Projection
F7	8'-0" x 8'-0" x 50"	22-#8 Each Way (4" O.C.) Top & Bottom W/ #8's Vert. @ 6" O.C.	Per P.E.M.B. & Crane Manufacturer w/ (4) ¾"ø A.B. x 15" W/ 3" Projection
F8	2'-6" x 2'-6" x 50"	6-#8 Each Way (4" O.C.) Top & Bottom W/ #8's Vert. @ 6" O.C.	Per P.E.M.B. Manufacturer w/ (4) ¾"ø A.B. x 15" W/ 3" Projection
F9	3'-0" x 3'-0" x 50"	7-#8 Each Way (4" O.C.) Top & Bottom W/ #8's Vert. @ 6" O.C.	Per P.E.M.B. Manufacturer w/ (4) ¾"ø A.B. x 15" W/ 3" Projection

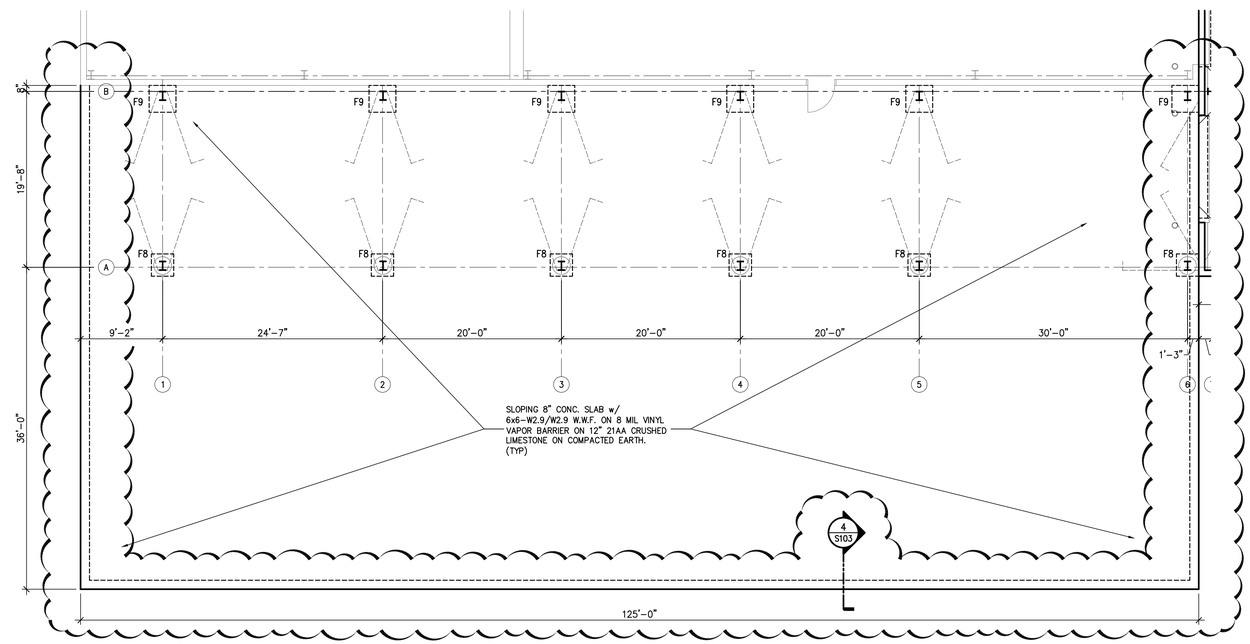

NORTH PARTIAL FOUNDATION PLAN

Scale: 1/8" = 1'-0"

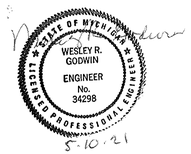

TOOLING AND EQUIPMENT INTERNATIONAL FOUNDRY ADDITION

12550 AND 12560 TECH CENTER DRIVE, LIVONIA, MI

ENGINEERING BY:
GODWIN + ASSOCIATES
architects & engineers
1200 E. Woodhurst, D - 100 Springfield, Missouri 65804
(417) 887-2667 Fax (417) 887-3215

HOPPE DESIGN, LLC
47032 McBRIDE, BELLEVILLE, MI 48111
734-218-2492

REVISIONS
ADD #1 05.10.21

PROJECT: 2003
DATE: 12.11.20
DRAWN: JAG
CHECKED: WRG

S102

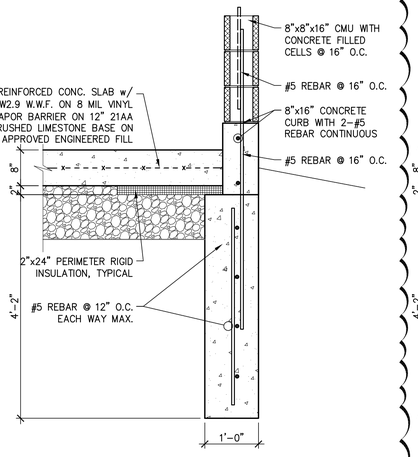

1 **Foundation Detail**
Scale: 3/4"=1'-0"

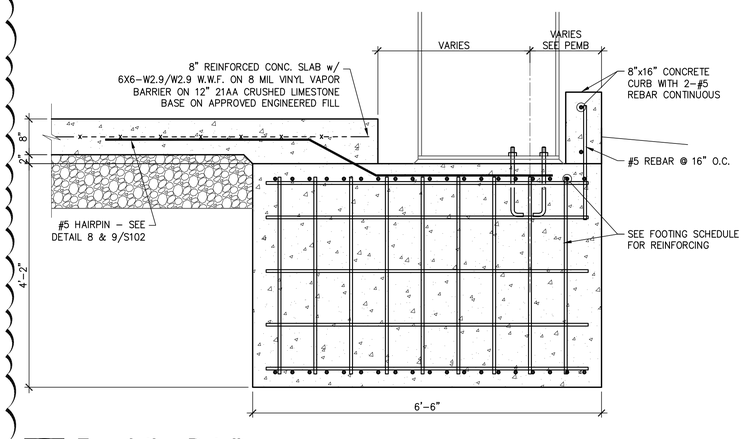

2 **Foundation Detail**
Scale: 3/4"=1'-0"

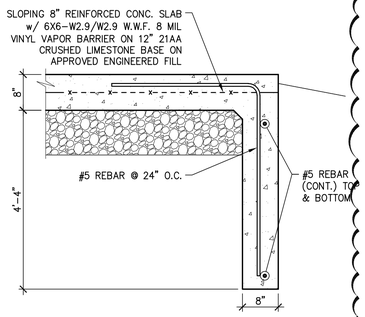

3 **Foundation Detail**
Scale: 3/4"=1'-0"

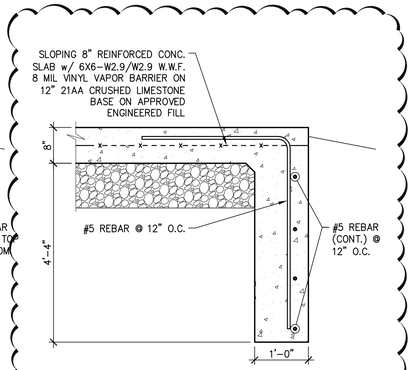

4 **Foundation Detail**
Scale: 3/4"=1'-0"

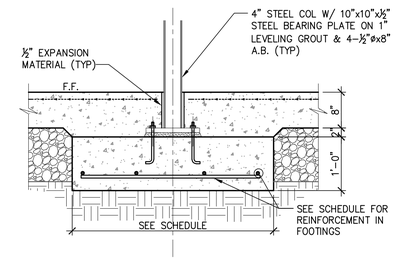

5 **Foundation Detail**
Scale: 3/4"=1'-0"

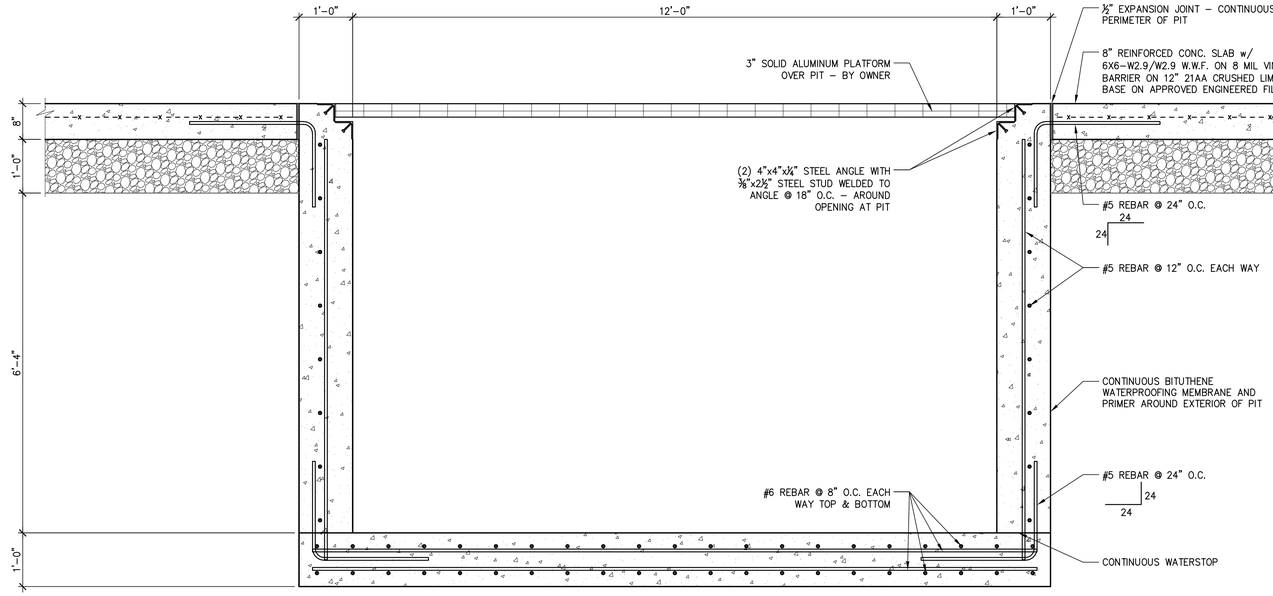

6 **Foundation Detail @ Concrete Pit**
Scale: 3/4"=1'-0"

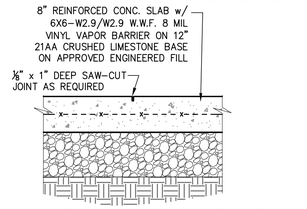

7 **Sawcut Control Detail**
Scale: 3/4"=1'-0"

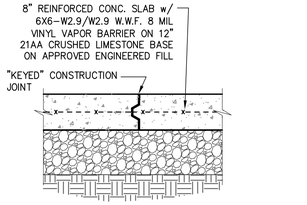

8 **Construction Joint Detail**
Scale: 3/4"=1'-0"

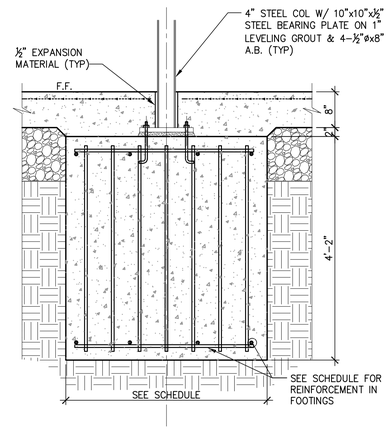

9 **Foundation Detail**
Scale: 3/4"=1'-0"

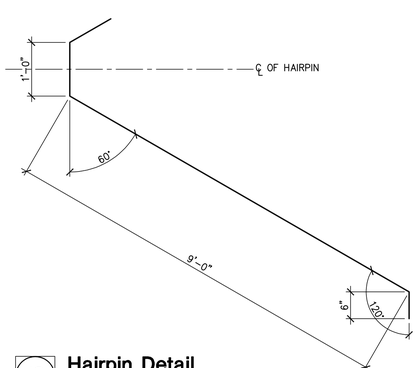

10 **Hairpin Detail**
Scale: 3/4"=1'-0"

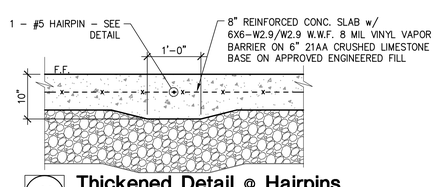

11 **Thickened Detail @ Hairpins**
Scale: 3/4"=1'-0"

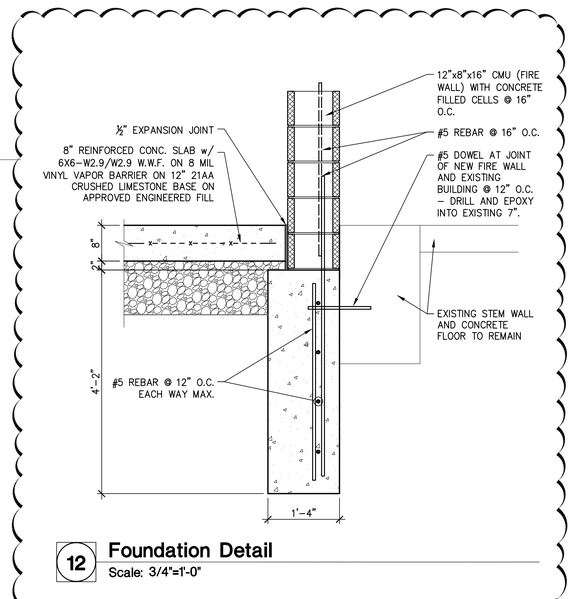

12 **Foundation Detail**
Scale: 3/4"=1'-0"

TOOLING AND EQUIPMENT INTERNATIONAL
FOUNDRY ADDITION
12550 AND 12560 TECH CENTER DRIVE, LIVONIA, MI

ENGINEERING BY:
GODWIN + ASSOCIATES
architects & engineers
1200 E. Woodlawn, D - 100, Springfield, Missouri 65804
(417) 887-2667 Fax (417) 887-9215

HOPPE DESIGN, LLC
47032 McBRIDE, BELLEVILLE, MI 48111
734-218-2492

REVISIONS
ADD #1 05.10.21

PROJECT: 2003
DATE: 12.11.20
DRAWN: JAG
CHECKED: WRG

STATE OF MISSOURI
WESLEY R. GODWIN
ENGINEER
No. 34298
LICENSED PROFESSIONAL ENGINEER
5.10.21

S103

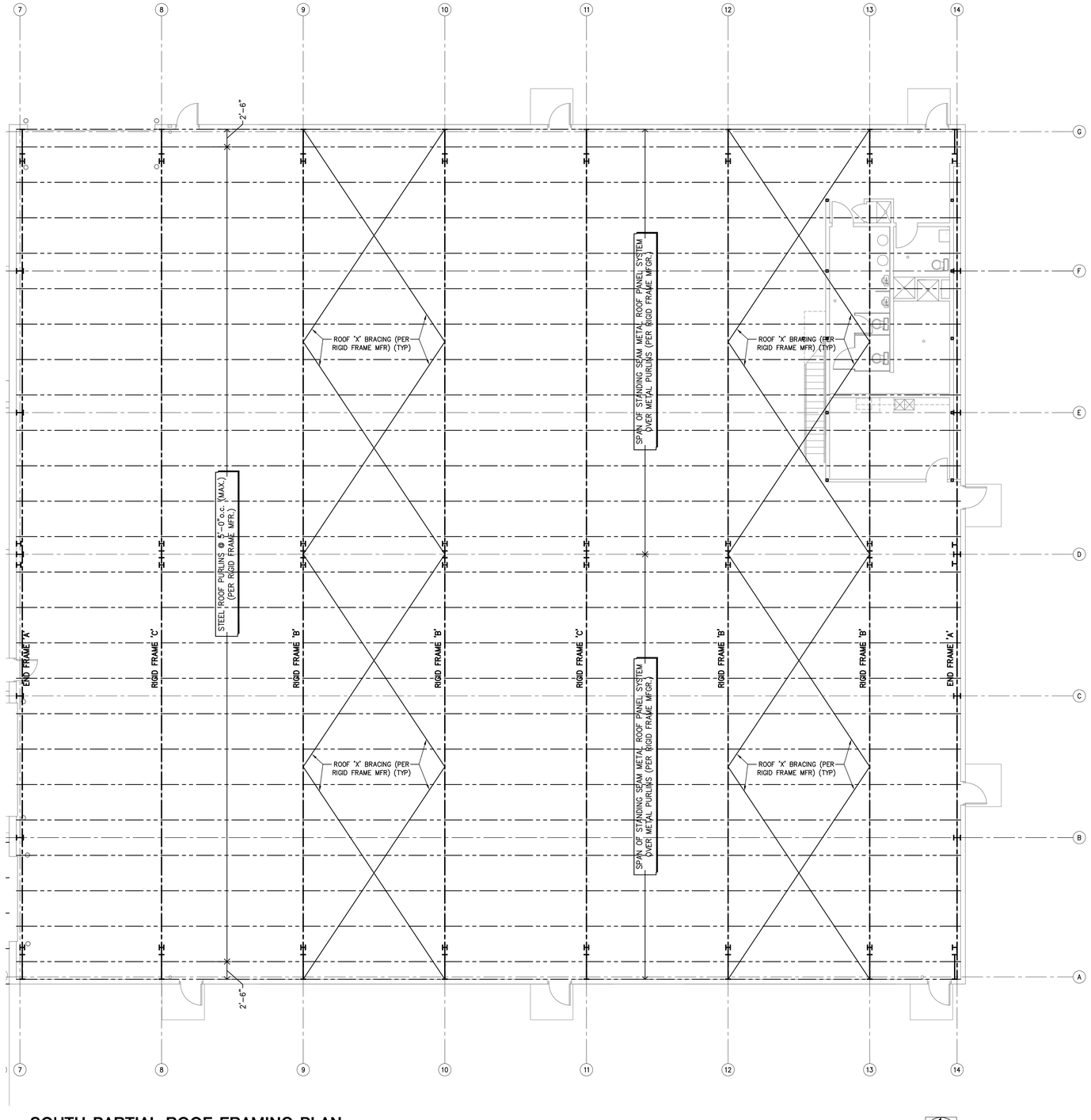

SOUTH PARTIAL ROOF FRAMING PLAN

Scale: 1/8" = 1'-0"

NORTH

ROOF FRAMING PLAN NOTES

1. STRUCTURAL STEEL FABRICATOR SHALL FURNISH SHOP DRAWINGS TO THE ENGINEER FOR REVIEW, PRIOR TO BEGINNING FABRICATION, SHOWING SIZES, CONNECTIONS, ANCHORING, BRACING, INSTALLATION DETAILS, ETC., CONSISTENT WITH CODE REQUIREMENTS. ALL SHOP DRAWINGS SHALL CARRY THE SEAL OF A LICENSED ENGINEER IN THE STATE OF ARKANSAS. ALLOW TWO WEEKS FOR ENGINEER'S REVIEW.

2. LOCATE ALL STRUCTURAL BRACING IN A MANNER SUCH THAT IT MAY BE EASILY CONCEALED; COORDINATE CONCEALMENT OF ALL BRACING WITH GENERAL CONTRACTOR.

3. ALL INTERIOR METAL HEADERS TO BE DOUBLE 8"x16 GA. WITH 16 GA. TRACK TOP AND BOTTOM TO MATCH WALL WIDTH.

4. ALL EXTERIOR METAL HEADERS TO BE TRIPLE 8"x16 GA. AND 6" X 16 GA. TRACK TOP AND BOTTOM.

5. ALL METAL STUD WALLS SHALL HAVE BRIDGING AT TOP, BOTTOM AND MIDPOINT AND AT 48" O.C. MAX. SPACING.

6. ALL BUILDING ROOFING SHALL BE STANDING SEAM METAL ROOF PANELS OVER METAL PURLINS AT THE BUILDING. SEE ROOF SLOPES ON ARCHITECTURAL ROOF PLAN.

STUD FRAMING CHART

ALLOWABLE HEIGHTS

** HEIGHTS BASED ON 16" O.C. STUD SPACING, 5 PSF LATERAL LOAD, L/240 DEFLECTION, NON-STRUCTURAL APPLICATION. BRIDGING AT MIDPOINTS OR 8'-0" MAX.

STUD SIZE	16" O.C./33 KSI **
3½" OR 4" X 20 GA.	13'-11"
3½" OR 4" X 18 GA.	18'-2"
3½" OR 4" X 16 GA.	19'-6"
5½" OR 6" X 20 GA.	23'-11"
5½" OR 6" X 18 GA.	27'-2"
5½" OR 6" X 16 GA.	30'-0"

*** HEIGHTS BASED ON 20 PSF LATERAL LOAD, L/240 DEFLECTION, STRUCTURAL APPLICATION. BRIDGING AT ⅓ POINTS OR 8'-0" MAX.

STUD SIZE	16" O.C./33 KSI***	12" O.C./33 KSI***
3½" OR 4" X 20 GA.	11'-0"	12'-3"
3½" OR 4" X 18 GA.	12'-0"	13'-3"
3½" OR 4" X 16 GA.	13'-0"	14'-3"
5½" OR 6" X 20 GA.	16'-4"	18'-0"
5½" OR 6" X 18 GA.	18'-0"	19'-8"
5½" OR 6" X 16 GA.	19'-3"	21'-3"
5½" OR 6" X 12 GA.	22'-9"	28'-0"

STUD SIZE	16" O.C./50 KSI***	12" O.C./50 KSI***
3½" OR 4" X 20 GA.	12'-0"	13'-6"
3½" OR 4" X 18 GA.	13'-3"	14'-8"
3½" OR 4" X 16 GA.	14'-3"	15'-8"
5½" OR 6" X 20 GA.	18'-0"	20'-0"
5½" OR 6" X 18 GA.	19'-8"	21'-8"
5½" OR 6" X 16 GA.	21'-3"	23'-4"
5½" OR 6" X 12 GA.	28'-0"	31'-0"

LINTEL SCHEDULE

UNDER 5'-0" IN LENGTH:	DOUBLE 8"x16 GA W/ 4"x18 GA OR 6"x16 GA. TRACK TOP & BOTTOM
5'-0" TO 13'-0" IN LENGTH:	DOUBLE 12"x16 GA. W/ 4"x18 GA. OR 6"x16 GA. TRACK TOP & BOTTOM
13'-0" TO 18'-0" IN LENGTH:	TRIPLE 12"x16 GA. W/ 6"x16 GA. TRACK TOP & BOTTOM

EXTEND LINTELS 8" BEYOND OPENING AND BEAR LINTELS ON TRIPLE STUDS SCREWED TOGETHER.

TOOLING AND EQUIPMENT INTERNATIONAL FOUNDRY ADDITION

12550 AND 12560 TECH CENTER DRIVE, LIVONIA, MI

ENGINEERING BY:
GODWIN + ASSOCIATES
architects & engineers
1200 E. Woodhurst, D - 100 Springfield, Missouri 65804
(417) 887-2667 Fax (417) 887-9213

HOPPE DESIGN, LLC
47032 McBRIDE BELLEVILLE, MI 48111
734-218-2492

REVISIONS

WESLEY R. GODWIN
ENGINEER
No. 34238
STATE OF MICHIGAN
LICENSED PROFESSIONAL ENGINEER
4-17-21

PROJECT: 2003
DATE: 12.11.20
DRAWN: JAG
CHECKED: WRG

S201

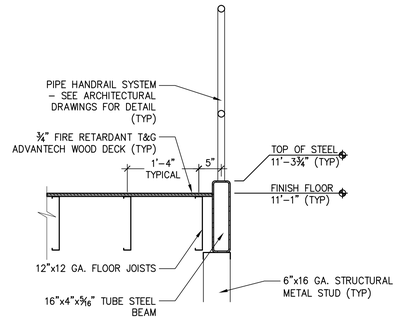

1 Framing Detail
Scale: 3/4"=1'-0"

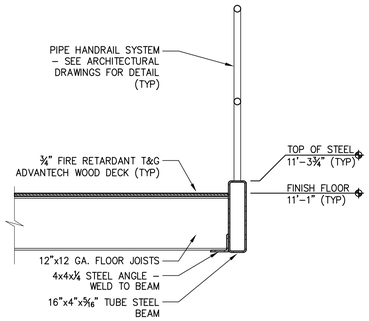

2 Framing Detail
Scale: 3/4"=1'-0"

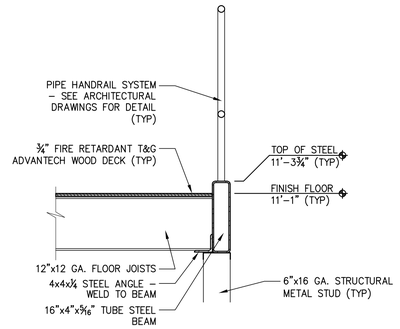

3 Framing Detail
Scale: 3/4"=1'-0"

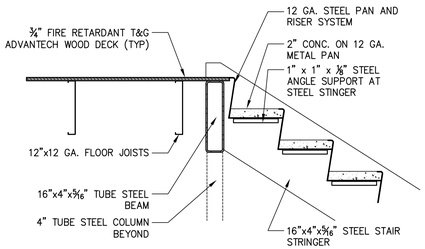

4 Framing Detail
Scale: 3/4"=1'-0"

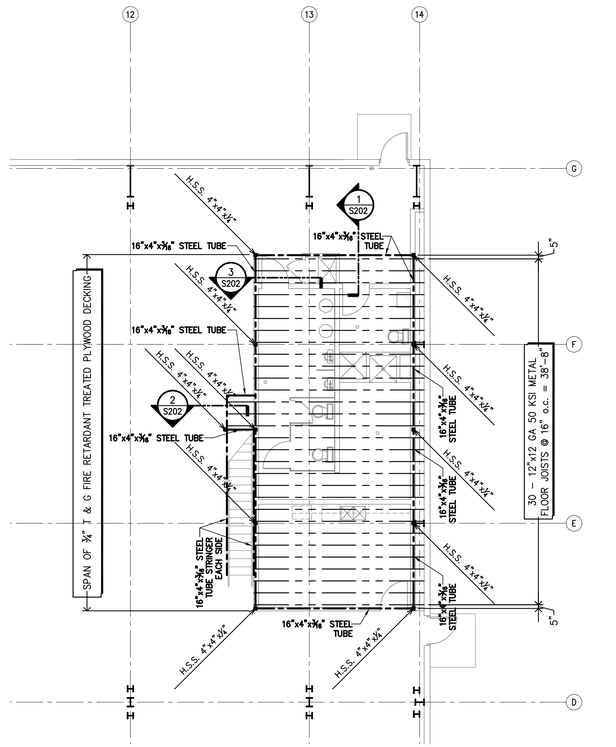

FLOOR FRAMING PLAN
Scale: 1/8" = 1'-0"

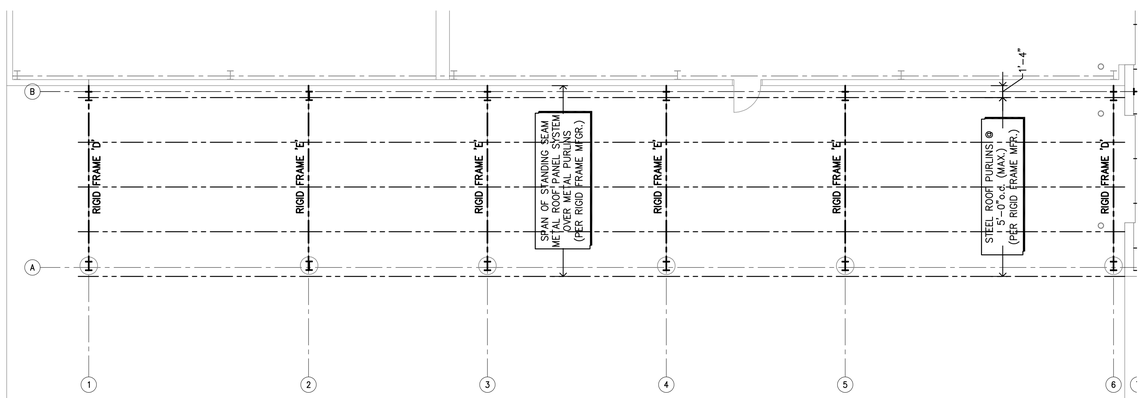

NORTH PARTIAL ROOF FRAMING PLAN
Scale: 1/8" = 1'-0"

FLOOR FRAMING PLAN NOTES

1. STRUCTURAL STEEL FABRICATOR, TRUSS, AND JOIST MFG'R SHALL FURNISH SHOP DRAWINGS FOR APPROVAL PRIOR TO FABRICATION. DRAWINGS SHALL SHOW SIZES, CONNECTIONS, ANCHORING,BRACING, ETC., CONSISTENT WITH REQUIREMENTS. ALL SHOP DRAWINGS SHALL CARRY THE SEAL OF A REGISTERED ENGINEER IN THE STATE OF MICHIGAN.

2. ALL COLUMN DIMENSIONS ARE TO COLUMN CENTERS AND ARE SYMMETRICAL ABOUT CENTERLINE OF BUILDING EXCEPT AS NOTED.

3. "T.O.S." REFERS TO "TOP OF STEEL" BEAMS AND SHALL BE 8'–11½" ABOVE MAIN FINISH FLOOR LEVEL UNLESS NOTED OTHERWISE.

4. CONTRACTOR SHALL BE RESPONSIBLE FOR BRACING AND SHORING OF THE STRUCTURE DURING CONSTRUCTION ENSURE STABILITY.

5. STEEL FRAMING COMPONENTS SHALL BE A MIN. OF ASTM A–36.

6. ALL BOLTED CONNECTIONS WILL BE ASSEMBLED AND INSPECTED ACCORDING TO "SPECIFICATIONS FOR STRUCTURAL JOINTS USING ASTM A325 OR ASTM A490 BOLTS"

7. ALL STRUCTURAL WELDED JOINTS SHALL CONFORM TO THE PROVISIONS OF AWS D1.1, STRUCTURAL WELDING CODE BY AMERICAN WELDING SOCIETY (SECTION 2207) NOTE ON STRUCTURAL PLANS THAT PROOF OF WELDER CERTIFICATION WILL BE AVAILABLE AT THE JOB SITE.

8. ALL GROUT UNDER THE BASE PLATES SHALL BE NON–SHRINK TYPE AND SHALL BE 1" THICKNESS.

9. PROVIDE BLOCKING FOR FLOOR JOISTS OVER BEARING AND AT MIDSPAN (UNLESS SPAN IS LESS THAN 8'–0")

STUD FRAMING CHART

ALLOWABLE HEIGHTS

** HEIGHTS BASED ON 16" O.C. STUD SPACING, 5 PSF LATERAL LOAD, L/240 DEFLECTION, NON–STRUCTURAL APPLICATION. BRIDGING AT MIDPOINTS OR 8'–0" MAX.

STUD SIZE	16" O.C./33 KSI **
3½" OR 4" X 20 GA.	13'–11"
3½" OR 4" X 18 GA.	18'–2"
3½" OR 4" X 16 GA.	19'–6"
5½" OR 6" X 20 GA.	23'–11"
5½" OR 6" X 18 GA.	27'–2"
5½" OR 6" X 16 GA.	30'–0"

*** HEIGHTS BASED ON 20 PSF LATERAL LOAD, L/240 DEFLECTION, STRUCTURAL APPLICATION. BRIDGING AT ⅓ POINTS OR 8'–0" MAX.

STUD SIZE	16" O.C./33 KSI***	12" O.C./33 KSI***
3½" OR 4" X 20 GA.	11'–0"	12'–3"
3½" OR 4" X 18 GA.	12'–0"	13'–3"
3½" OR 4" X 16 GA.	13'–0"	14'–3"
5½" OR 6" X 20 GA.	16'–4"	18'–0"
5½" OR 6" X 18 GA.	18'–0"	19'–8"
5½" OR 6" X 16 GA.	19'–3"	21'–3"
5½" OR 6" X 12 GA.	22'–9"	28'–0"

STUD SIZE	16" O.C./50 KSI***	12" O.C./50 KSI***
3½" OR 4" X 20 GA.	12'–0"	13'–6"
3½" OR 4" X 18 GA.	13'–3"	14'–8"
3½" OR 4" X 16 GA.	14'–3"	15'–8"
5½" OR 6" X 20 GA.	18'–0"	20'–0"
5½" OR 6" X 18 GA.	19'–8"	21'–8"
5½" OR 6" X 16 GA.	21'–3"	23'–4"
5½" OR 6" X 12 GA.	28'–0"	31'–0"

LINTEL SCHEDULE

UNDER 5'–0" IN LENGTH:	DOUBLE 8"x16 GA W/ 4"x18 GA OR 6"x16 GA. TRACK TOP & BOTTOM
5'–0" TO 13'–0" IN LENGTH:	DOUBLE 12"x16 GA. W/ 4"x18 GA. OR 6"x16 GA. TRACK TOP & BOTTOM
13'–0" TO 18'–0" IN LENGTH:	TRIPLE 12"x16 GA. W/ 6"x16 GA. TRACK TOP & BOTTOM

EXTEND LINTELS 8" BEYOND OPENING AND BEAR LINTELS ON TRIPLE STUDS SCREWED TOGETHER.

TOOLING AND EQUIPMENT INTERNATIONAL FOUNDRY ADDITION
12550 AND 12560 TECH CENTER DRIVE, LIVONIA, MI

ENGINEERING BY:
GODWIN + ASSOCIATES
architects & engineers
1200 E. Woodhurst, D–100, Springfield, Missouri 65804
(417) 887–2667 Fax (417) 887–9243

HOPPE DESIGN, LLC
47032 McBRIDE, BELLEVILLE, MI 48111
734-216-2492

REVISIONS

WESLEY R. GODWIN
ENGINEER
No. 34298
STATE OF MICHIGAN
REGISTERED PROFESSIONAL ENGINEER
4-17-21

PROJECT: 2003
DATE: 12.11.20
DRAWN: JAG
CHECKED: WRG

S202

TOOLING AND EQUIPMENT INTERNATIONAL FOUNDRY ADDITION

12550 AND 12560 TECH CENTER DRIVE, LIVONIA, MI

	PROJECT DESCRIPTION		
	TOOLING AND EQUIPMENT INT ADDITION B	ADDITION OF F-2	
	APPLICABLE CODES		
	BUILDING	2015 MICHIGAN BUILDING CODE	
		INTERNATIONAL FIRE CODE	
	ACCESSIBILITY	2009 ICC/ANSI A 117.1 - ACCESSIBLE AND USABLE BUILDINGS AND	
		2010 AMERICANS WITH DISABILITIES	
	ENERGY CODE	ASHRAE 90.1 2013; IECC 2015	
	MECHANICAL	2015 INTERNATIONAL MECHANICAL	
	PLUMBING	2015 INTERNATIONAL PLUMBING CODE	
	ELECTRICAL	2017 NFPA 70 NATIONAL ELECTRICAL	
SECTION #	**CHAPTER 1**		
107.3.4	REGISTERED DESIGN PROFESSIONAL IN RESPONSIBILE CHARGE		WAYDE HOPPE
107.3.4.1	THE FOLLOWING ITEMS ARE DEFERRED SUBMITTALS. DESIGN OF THESE ITEMS WILL BE SUBMITTED AFTER THE AWARD OF CONTRACT		PRE ENGINEERED METAL BUILDING
SECTION #	**CHAPTER 3**	**REQUIRED**	**PROVIDED**
	USE AND OCCUPANCY CLASSIFICATION		
304	OCCUPANCY CLASSIFICATION FOR MAIN EXISTING BUILDING	FACTORY AND INDUSTRIAL	
	GROUP CLASSIFICATION	GROUP F-2	
	USE CLASSIFICATION	FOUNDRY	
SECTION #	**CHAPTER 5**	**REQUIRED**	**PROVIDED**
	BUILDING AREA		
SECTION 503.1.2	SEPARATE BUILDINGS		
	ASSUME TYPE IIB CONSTRUCTION TYPE	**TABULAR ALLOWABLE AREA PER FLR**	
TABLE 506.2	BASIC TABULAR AREA FOR USE GROUP F-2 WITHOUT SPRINKLER SYSTEM (NS)	23,000	16,440
	TOTAL ALLOWABLE BUILDING AREA IF NON SPRINKLED	**23000**	16,440
SECTION #	**BUILDING HEIGHT**	**REQUIRED**	**PROVIDED**
	CODE-ALLOWABLE HEIGHT		
TABLE 504.3	TABULAR ALLOWABLE BUILDING HEIGHT	55'	30'
TABLE 504.4	TABULAR ALLOWABLE NUMBER OF STORIES	3 STORIES	1 STORY
SECTION #	**CHAPTER 6**	**REQUIRED**	**PROVIDED**
	BUILDING CONSTRUCTION TYPE		
	CONSTRUCTION TYPE	IIB	IIB
TABLE 601	FIRE RESISTANCE RATINGS		
TABLE 601	STRUCTURAL FRAME	0 HOURS	0 HOURS
TABLE 601	EXTERIOR BEARING WALLS	0 HOURS	0 HOURS
TABLE 601	INTERIOR BEARING WALLS	0 HOURS	0 HOURS
TABLE 601	EXTERIOR NON-BEARING WALLS/PARTITIONS	0 HOURS	0 HOURS
TABLE 601	INTERIOR NON-BEARING WALLS/PARTITIONS	0 HOURS	0 HOURS
TABLE 601	FLOOR CONSTRUCTION	0 HOURS	0 HOURS
TABLE 601	ROOF CONSTRUCTION	0 HOURS	0 HOURS
SECTION #	**CHAPTER 7**	**REQUIRED**	**PROVIDED**
	FIRE AND SMOKE PROTECTION FEATURES		
	FIRE-RESISTANCE RATED CONSTRUCTION		
SECTION 705.8.1	EXTERIOR WALL OPENINGS		UNLIMITED PER EXCEPTION 2
TABLE 706.4	FIRE WALL RATING	2 HOURS	2 HOURS
TABLE 707.3.10	FIRE BARRIER RATING	2 HOURS	2 HOURS
	SHAFT ENCLOSURES	NOT APPLICABLE	NOT APPLICABLE
SECTION 708	FIRE PARTITIONS	NOT APPLICABLE	NOT APPLICABLE
	SMOKE BARRIERS	NOT APPLICABLE	NOT APPLICABLE
	SMOKE PARTITIONS	NOT APPLICABLE	NOT APPLICABLE
SECTION 718.2.2	HORIZONTAL FIRE BLOCKING	NOT APPLICABLE	NOT APPLICABLE
SECTION 705.3	BUILDINGS ON THE SAME LOT	MEET 601 AND 602	SEPARATION DISTANCE > 30'
SECTION 706.1	SEPARATE BUILDINGS	USE A FIRE WALL TO MAKE SEPARATE BUILDINGS ON THE SAME SITE	PROVIDED
SECTION 706.5	FIRE WALLS	TERMINATE ON INSIDE FACE OF NON COMBUSTIBLE SIDING	EXCEPTION 2
SECTION 706.5.1	FIRE WALLS	1 HR RATING REQUIRED 4' FROM FIRE WALL	
SECTION 706.6 EXCEPTION 3	FIRE WALLS	WALL SHALL TERMINATE AT UNDERSIDE OF ROOF IF CLASS B ROOF	
SECTION #	**CHAPTER 8**	**REQUIRED**	**PROVIDED**
	INTERIOR FINISHES		
		F ACTORY	
TABLE 803.11	-EXIT ENCLOSURES/ PASSAGEWAYS	CLASS B (25-75 FLAME SPREAD INDEX: ,450 SMOKE DEVELOPED INDEX)	CLASS B (25-75 FLAME SPREAD INDEX: ,450 SMOKE DEVELOPED INDEX)
TABLE 803.11	-CORRIDORS	CLASS C (76-200 FLAME SPREAD INDEX: ,450 SMOKE DEVELOPED INDEX)	CLASS C (76-200 FLAME SPREAD INDEX: ,450 SMOKE DEVELOPED INDEX)
TABLE 803.11	-ROOMS AND ENCLOSED SPACES	CLASS C (76-200 FLAME SPREAD INDEX: ,450 SMOKE DEVELOPED INDEX)	CLASS C (76-200 FLAME SPREAD INDEX: ,450 SMOKE DEVELOPED INDEX)
SECTION #	**CHAPTER 9**	**REQUIRED**	**PROVIDED**
	FIRE PROTECTION SYSTEMS		
SECTION 903.2.11.1	STORIES WITHOUT OPENINGS	20 SF OPENINGS EVERY 50 LINEAL FEET	
SECTION 906.1	FIRE EXTINGUISHERS	REQUIRED	PROVIDED
SECTION #	**CHAPTER 10**	**REQUIRED**	**PROVIDED**
	OCCUPANT LOAD: FOR NUMBER OF EXITS		
	F-2 FACTORY		
TABLE 1004.1.1	FOUNDRY (100 GROSS)	200 (GROSS)	16440 / 200 = 83
	MEANS OF EGRESS		
	EGRESS TYPES	**F-2**	
	STAIRWAYS	NA	N/A
	OTHER EGRESS COMPONENTS: .2"/PERSON	83 PEOPLE X.2"/PERSON = 16.6 INCHES	
TABLE 1017.2	TRAVEL DISTANCE NON SPRINKLED	300'	
SECTION 1020.2	CORRIDOR WIDTH	44 INCHES (MIN.)	
TABLE 1020.1	CORRIDOR RATING NON SPRINKLED	1 HOUR	
TABLE 1006.3.1	NUMBER OF EXITS	2	

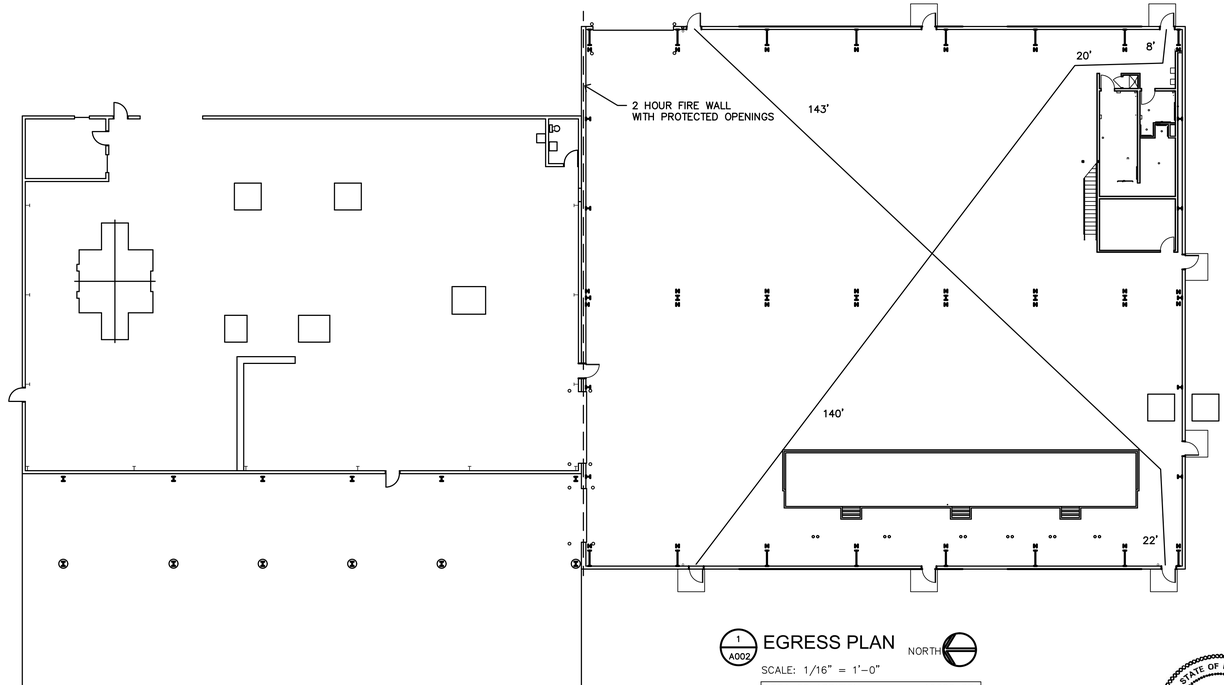

1 / A002 EGRESS PLAN NORTH

SCALE: 1/16" = 1'-0"

AREA OF ADDITION:	16,380 SF
AREA OF SHED NEW ROOF:	2400 SF
AREA OF EXISTING FOUNDRY	10,000 SF

HOPPE DESIGN, LLC
47032 McBRIDE, BELLEVILLE, MI 48111
734-218-2492

STATE OF MICHIGAN
WAYDE C. HOPPE
ARCHITECT
No. 1301036190
LICENSED ARCHITECT

WAYDE C. Hoppe

REVISIONS

PROJECT: 2003
DATE: 4.16.21
DRAWN: WCH
CHECKED: WCH

RELEASED FOR PERMITTING 4.16.21

CODE REVIEW

A002

COPYRIGHT ALL RIGHTS RESERVED BY WAYDE C. HOPPE, ARCHITECT
NOT TO BE COPIED OR REPRODUCED WITHOUT WRITTEN PERMISSION

TOOLING AND EQUIPMENT INTERNATIONAL
FOUNDRY ADDITION

12550 AND 12560 TECH CENTER DRIVE, LIVONIA, MI

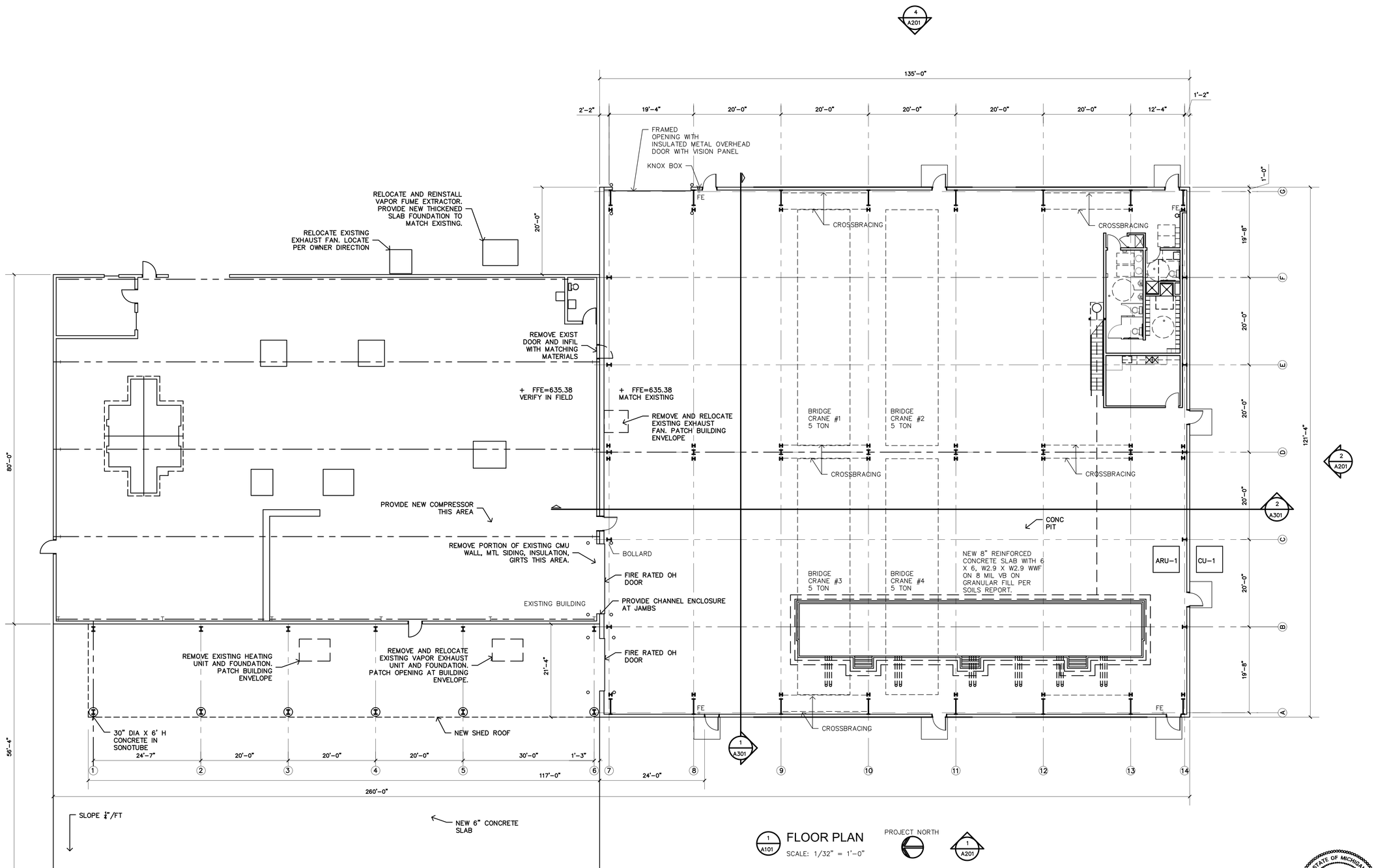

1 A101 FLOOR PLAN

SCALE: 1/32" = 1'-0"

PROJECT NORTH

1 A201

NOTES:
1. PEMB MFR TO PROVIDE CRANE COLUMNS AND END STOPS FOR CRANES
2. PEMB MFR TO PROVIDE, SUPPLY, INSTALL AND LEVEL CRANE RAIL. COORDINATE WITH CRANE MFR FOR SIZE AND CONNECTION.
3. PEMB MFR TO PROVIDE SUPPORT FOR FANS AS SHOWN ON MEP DRAWINGS.
4. FLOOR SLAB TO BE LEVEL AND FLAT WITHOUT ELEVATION CHANGES.
5. ALL BUILDING ENVELOPE PATCHES TO MATCH EXISTING IN FINISH, FUNCTION, MATERIALS AND COLOR.

HOPPE DESIGN, LLC
47032 McBRIDE, BELLEVILLE, MI 48111
734-218-2492

STATE OF MICHIGAN
WAYDE C. HOPPE
ARCHITECT
No. 1301036190
LICENSED ARCHITECT

WAYDE C. HOPPE

REVISIONS

PROJECT: 2003
DATE: 4.16.21
DRAWN: WCH
CHECKED: WCH

VERIFY ALL DIMENSIONS IN FIELD
RELEASED FOR PERMITTING 4.16.21

FLOOR PLAN

A101

COPYRIGHT ALL RIGHTS RESERVED BY WAYDE C. HOPPE, ARCHITECT
NOT TO BE COPIED OR REPRODUCED WITHOUT WRITTEN PERMISSION

WALL TYPES

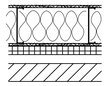

1

4" MASONRY VENEER ON 2" AIRSPACE ON 2" RIGID INSUL. ON MOISTURE BARRIER ON ½" DENS GLASS ON 8" MTL STUDS 16" O.C. W/ 6" FIBERGLASS INSUL. W/ VAPOR BARRIER W/ ⅝" GWB.

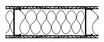

2

⅝" GWB ON BOTH SIDES OF 6" MTL STUDS 16" O.C W/ SOUND ATTENUATION INSUL.



3

⅝" GWB ON BOTH SIDES OF 3 5/8" MTL STUDS 16" O.C.

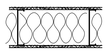

4

⅝" GWB ON BOTH SIDES OF 8" MTL STUDS 16" O.C. W/ SOUND ATTENUATION INSUL.



5

⅝" GWB ON BOTH SIDES OF 3⅝" MTL STUDS 16" O.C. W/ SOUND ATTENUATION INSUL.

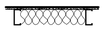

6

⅝" GWB ON ONE SIDE 3⅝" MTL STUDS 16" O.C.



7

⅝" GWB ON BOTH SIDES 6" MTL STUDS 16" O.C.



8

⅝" GWB ON BOTH SIDES 8" MTL STUDS 16" O.C.

KEYNOTES (X)

1. WALLMOUNTED FIRE EXTINGUISHER, 2A-10BC
2. WATER METER
3. FEMININE NAPKIN DISPOSAL
4. MOP RACK
5. GRAB BAR
6. TOILET PAPER DISPENSER
7. MIRROR
8. ROBE HOOK
9. ACOUSTICAL WALL INSULATION
10. ACOUSTICAL CEILING INSULATION
11. SLOP SINK
12. FLOOR DRAIN
13. POWERED WALL HUNG HAND DRYER
14. WALL HUNG SANITIZER DISPENSER
15. THROUGH COUNTER SOAP DISPENSER
16. 2 SIDED 12" X 12" ALUM PROJECTING SIGN BLUE ON WHITE; K-8192 BY 'MY DOOR SIGN'. PROVIDE WALL BRACKET.
17. ACROVYN WALL PROTECTION WITH WAINSCOT TRIM AND MATCHING CORNER GUARD.
18. DRINKING FOUNTAIN
19. EYE WASH STATION
20. VENDING MACHINE: BY OTHERS
21. MICROWAVE: BY OTHERS
22. SINK
23. DISHWASHER: BY OTHERS
24. GARBAGE DISPOSAL
25. REFRIGERATOR: BY OTHERS
26. 1 ¼" DIA MTL PIPE RAIL

GENERAL NOTES

1. ALL DIMENSIONS ARE TO BE FIELD VERIFIED.
2. ALL DIMENSIONS ARE TO FACE OF FINISH GYPSUM WALL BOARD.
3. ALL CABINET DIMENSIONS TO BE VERIFIED PRIOR TO CONSTRUCTION AND PLACEMENT OF PARTITIONS, WINDOWS, DOORS AND OTHER PORTIONS OF CONSTRUCTION. PROVIDE FILLERS AND NOTIFY ARCHITECT OF DISCREPANCIES FROM PLAN.
4. PROVIDE 2X WOOD BLOCKING FOR ALL ACCESSORIES.
5. URETHANE FILLER AT ALL SAWCUT CONTROL JOINTS IN SLAB

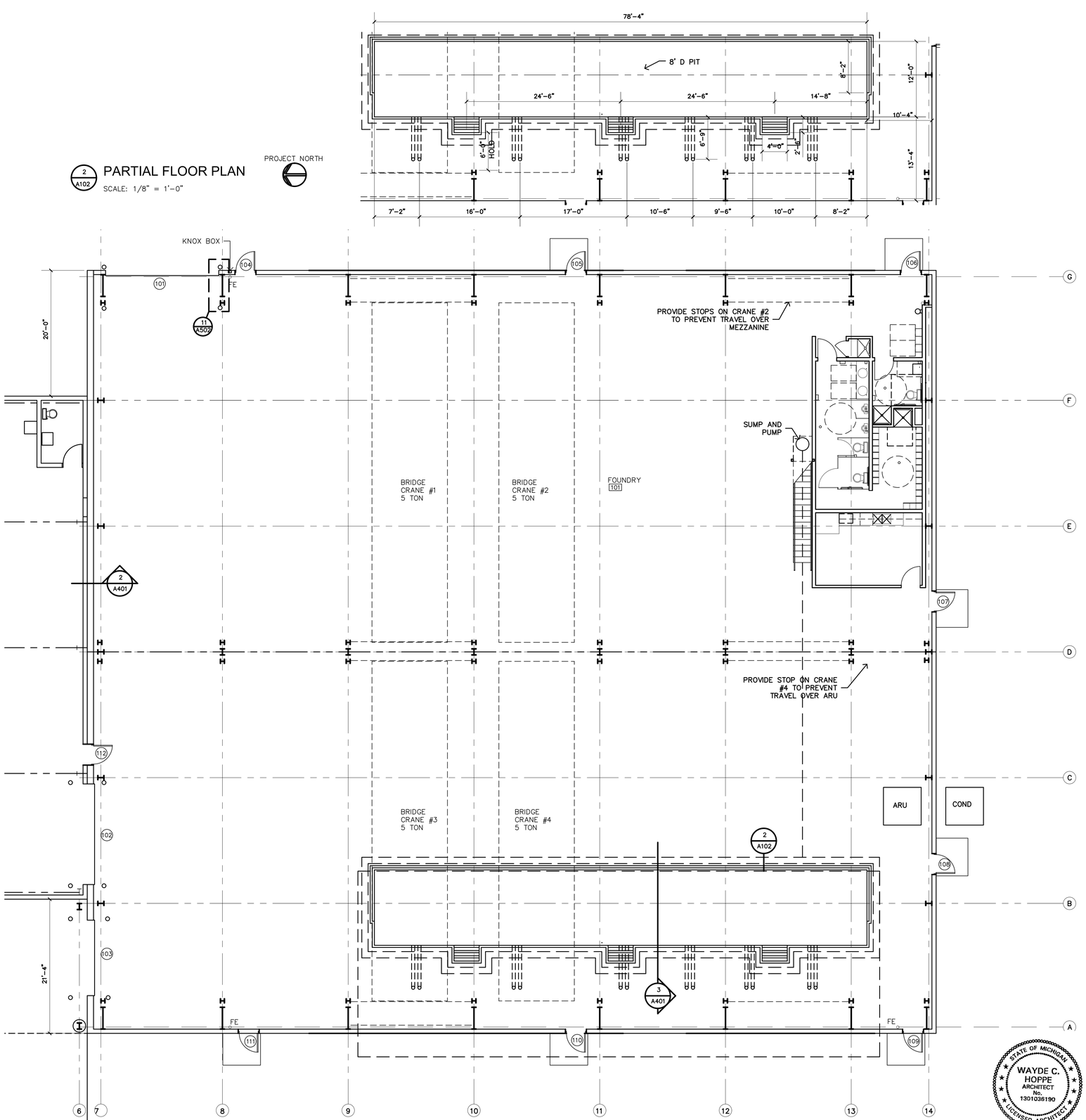

2 A102 PARTIAL FLOOR PLAN

SCALE: 1/8" = 1'-0"

PROJECT NORTH

1 A102 PARTIAL FLOOR PLAN

SCALE: 1/8" = 1'-0"

PROJECT NORTH

VERIFY ALL DIMENSIONS IN FIELD
RELEASED FOR PERMITTING 4.16.21

TOOLING AND EQUIPMENT INTERNATIONAL FOUNDRY ADDITION

12550 AND 12560 TECH CENTER DRIVE, LIVONIA, MI

HOPPE DESIGN, LLC
47032 McBRIDE, BELLEVILLE, MI 48111
734-218-2492

STATE OF MICHIGAN
WAYDE C. HOPPE
ARCHITECT
No. 1301036190
LICENSED ARCHITECT

WAYDE C. HOPPE

REVISIONS

PROJECT: 2003
DATE: 4.16.21
DRAWN: WCH
CHECKED: WCH

PARTIAL FLOOR PLAN

A102

COPYRIGHT ALL RIGHTS RESERVED BY WAYDE C. HOPPE, ARCHITECT
NOT TO BE COPIED OR REPRODUCED WITHOUT WRITTEN PERMISSION

TOOLING AND EQUIPMENT INTERNATIONAL FOUNDRY ADDITION

12550 AND 12560 TECH CENTER DRIVE, LIVONIA, MI

WALL TYPES

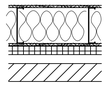

1

4" MASONRY VENEER ON 2" AIRSPACE ON 2" RIGID INSUL. ON MOISTURE BARRIER ON ½" DENS GLASS ON 8" MTL STUDS 16" O.C. W/ 6" FIBERGLASS INSUL. W/ VAPOR BARRIER W/ ⅝" GWB.



2

⅝" GWB ON BOTH SIDES OF 5 1/2" MTL STUDS 16" O.C W/ SOUND ATTENUATION INSUL.

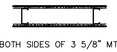

3

⅝" GWB ON BOTH SIDES OF 3 5/8" MTL STUDS 16" O.C.

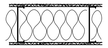

4

⅝" GWB ON BOTH SIDES OF 8" MTL STUDS 16" O.C. W/ SOUND ATTENUATION INSUL.



5

⅝" GWB ON BOTH SIDES OF 3⅝" MTL STUDS 16" O.C. W/ SOUND ATTENUATION INSUL.



6

⅝" GWB ON ONE SIDE 3⅝" MTL STUDS 16" O.C.



7

⅝" GWB ON BOTH SIDES 6" MTL STUDS 16" O.C.



8

⅝" GWB ON BOTH SIDES 8" MTL STUDS 16" O.C.

KEYNOTES (X)

1. WALLMOUNTED FIRE EXTINGUISHER, 2A-10BC
2. WATER METER
3. FEMININE NAPKIN DISPOSAL
4. MOP RACK
5. GRAB BAR
6. TOILET PAPER DISPENSER
7. MIRROR
8. ROBE HOOK
9. ACOUSTICAL WALL INSULATION
10. ACOUSTICAL CEILING INSULATION
11. SLOP SINK
12. FLOOR DRAIN
13. POWERED WALL HUNG HAND DRYER
14. WALL HUNG SANITIZER DISPENSER
15. THROUGH COUNTER SOAP DISPENSER
16. 2 SIDED 12" X 12" ALUM PROJECTING SIGN BLUE ON WHITE; K-8192 BY 'MY DOOR SIGN'. PROVIDE WALL BRACKET.
17. ACROVYN WALL PROTECTION WITH WAINSCOT TRIM AND MATCHING CORNER GUARD.
18. DRINKING FOUNTAIN
19. EYE WASH STATION
20. VENDING MACHINE: BY OTHERS
21. MICROWAVE: BY OTHERS
22. SINK
23. DISHWASHER: BY OTHERS
24. GARBAGE DISPOSAL
25. REFRIGERATOR: BY OTHERS
26. 1 ½" DIA MTL PIPE RAIL

GENERAL NOTES

1. ALL DIMENSIONS ARE TO BE FIELD VERIFIED.
2. ALL DIMENSIONS ARE TO FACE OF FINISH GYPSUM WALL BOARD.
3. ALL CABINET DIMENSIONS TO BE VERIFIED PRIOR TO CONSTRUCTION AND PLACEMENT OF PARTITIONS, WINDOWS, DOORS AND OTHER PORTIONS OF CONSTRUCTION. PROVIDE FILLERS AND NOTIFY ARCHITECT OF DISCREPANCIES FROM PLAN.
4. PROVIDE 2X WOOD BLOCKING FOR ALL ACCESSORIES.
5. URETHANE FILLER AT ALL SAWCUT CONTROL JOINTS IN SLAB

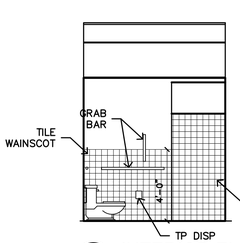

7 / A103 INTERIOR ELEVATION

SCALE: 1/4" = 1'-0"

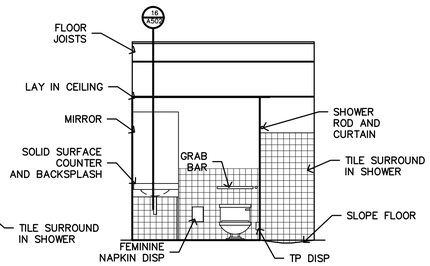

6 / A103 INTERIOR ELEVATION

SCALE: 1/4" = 1'-0"

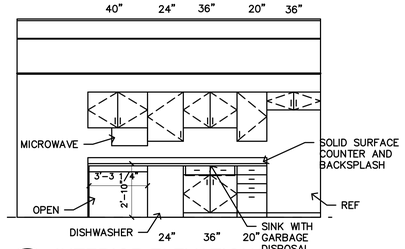

5 / A103 INTERIOR ELEVATION

SCALE: 1/4" = 1'-0"

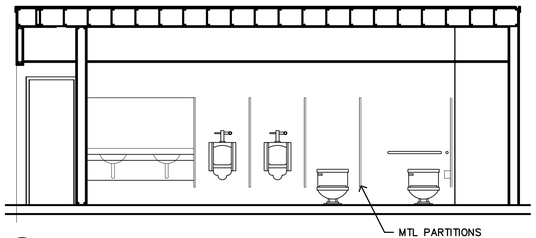

4 / A103 INTERIOR ELEVATION

SCALE: 1/4" = 1'-0"

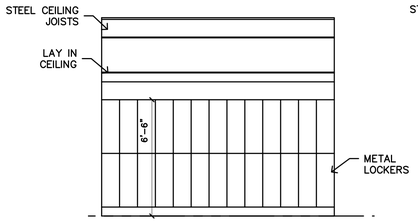

8 / A103 INTERIOR ELEVATION

SCALE: 1/4" = 1'-0"

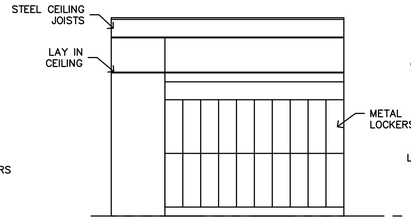

9 / A103 INTERIOR ELEVATION

SCALE: 1/4" = 1'-0"

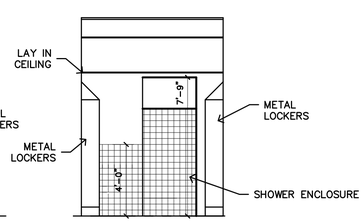

10 / A103 INTERIOR ELEVATION

SCALE: 1/4" = 1'-0"

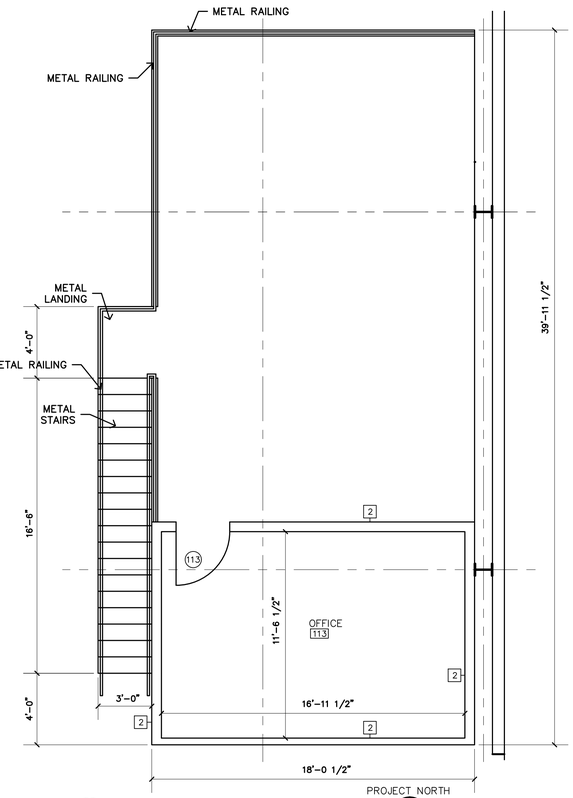

3 / A103 MEZZANINE FLOOR PLAN

SCALE: 1/4" = 1'-0"

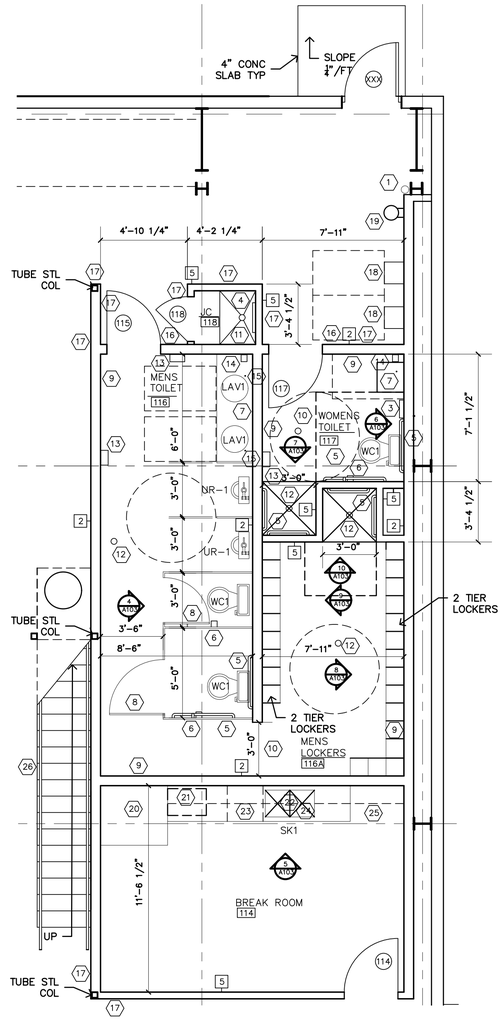

1 / A103 PARTIAL FLOOR PLAN

SCALE: 1/4" = 1'-0"

PROJECT NORTH

NOTES
1. SLOPE FLOOR SLAB AT SHOWER FLOOR



VERIFY ALL DIMENSIONS IN FIELD
RELEASED FOR PERMITTING 4.16.21

HOPPE DESIGN, LLC
47032 McBRIDE, BELLEVILLE, MI 48111
734-218-2492

REVISIONS

PROJECT: 2003
DATE: 4.16.21
DRAWN: WCH
CHECKED: WCH

PARTIAL FLOOR PLAN

A103

COPYRIGHT ALL RIGHTS RESERVED BY WAYDE C. HOPPE, ARCHITECT
NOT TO BE COPIED OR REPRODUCED WITHOUT WRITTEN PERMISSION

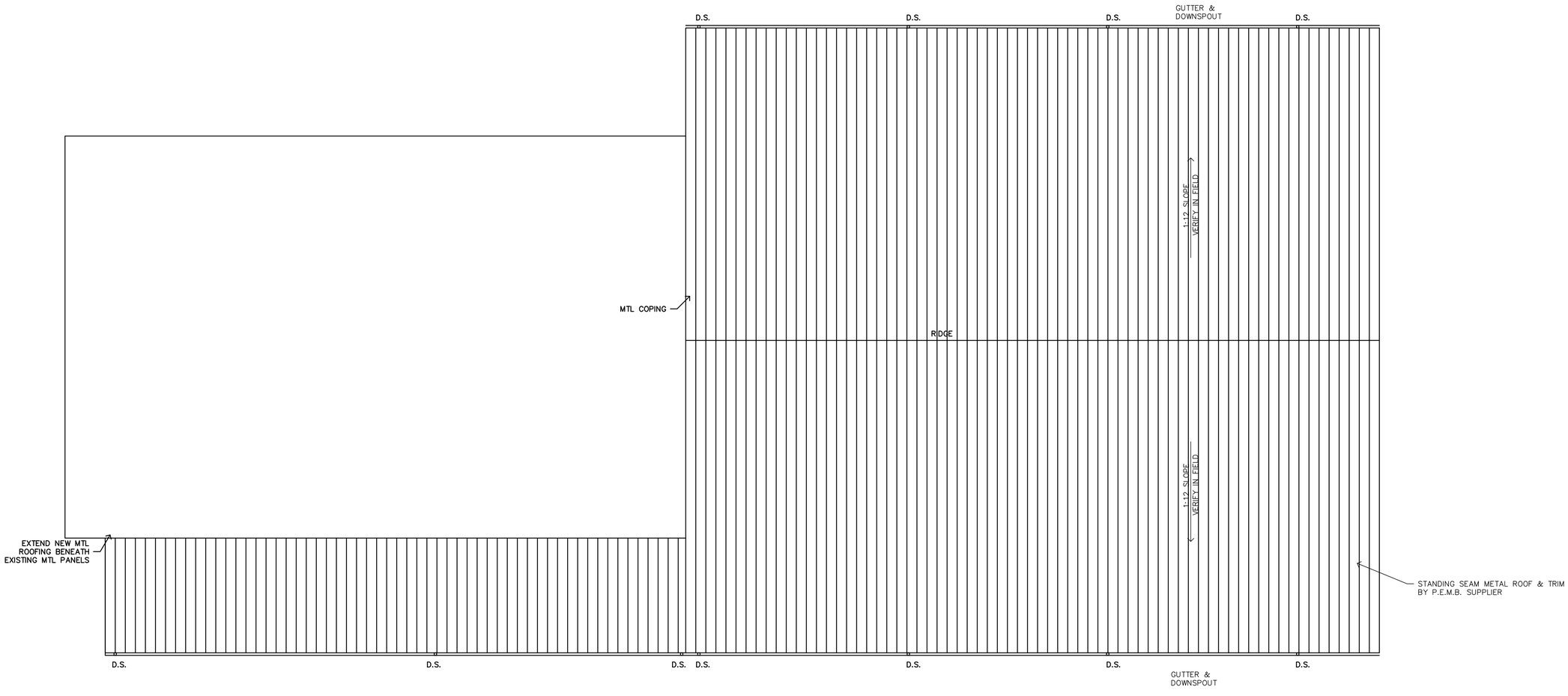

1/A104 ROOF PLAN

SCALE: 3/32" = 1'-0"

VERIFY ALL DIMENSIONS IN FIELD
RELEASED FOR PERMITTING 4.16.21

TOOLING AND EQUIPMENT INTERNATIONAL
FOUNDRY ADDITION

12550 AND 12560 TECH CENTER DRIVE, LIVONIA, MI

HOPPE DESIGN, LLC
47032 McBRIDE, BELLEVILLE, MI 48111
734-218-2482

STATE OF MICHIGAN
WAYDE C. HOPPE
ARCHITECT
No. 1301036190
LICENSED ARCHITECT

WAYDE C. HOPPE

REVISIONS

PROJECT: 2003
DATE: 4.16.21
DRAWN: WCH
CHECKED: WCH

ROOF PLAN

A104

COPYRIGHT ALL RIGHTS RESERVED BY WAYDE C. HOPPE, ARCHITECT
NOT TO BE COPIED OR REPRODUCED WITHOUT WRITTEN PERMISSION

TOOLING AND EQUIPMENT INTERNATIONAL
FOUNDRY ADDITION

12550 AND 12560 TECH CENTER DRIVE, LIVONIA, MI

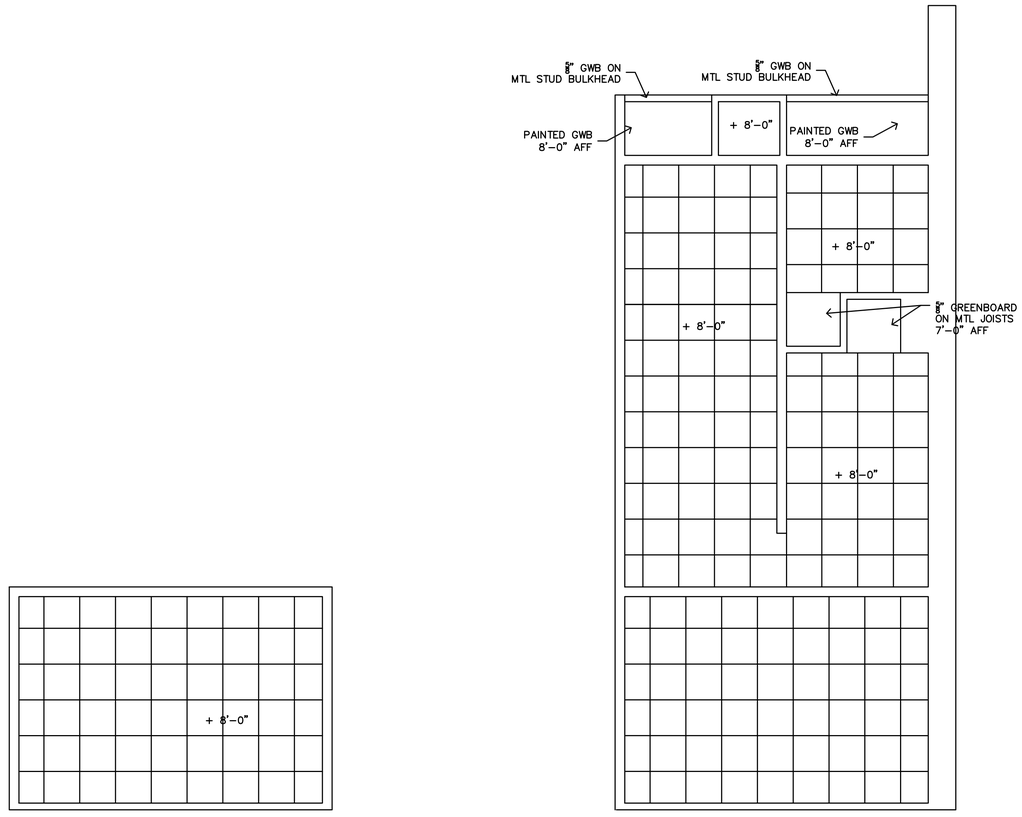

2 / A105 REFLECTED CEILING PLAN MEZZANINE
SCALE: 1/4" = 1'-0"

PROJECT NORTH

1 / A105 REFLECTED CEILING PLAN FIRST FLOOR
SCALE: 1/4" = 1'-0"

PROJECT NORTH

HOPPE DESIGN, LLC
47032 McBRIDE, BELLEVILLE, MI 48111
734-218-2492

STATE OF MICHIGAN
WAYDE C. HOPPE
ARCHITECT
No. 1301036190
LICENSED ARCHITECT

WAYDE C. HOPPE

REVISIONS

PROJECT: 2003
DATE: 4.16.21
DRAWN: WCH
CHECKED: WCH

VERIFY ALL DIMENSIONS IN FIELD
RELEASED FOR PERMITTING 4.16.21

REFLECTED CEILING PLAN

A105

COPYRIGHT ALL RIGHTS RESERVED BY WAYDE C. HOPPE, ARCHITECT
NOT TO BE COPIED OR REPRODUCED WITHOUT WRITTEN PERMISSION

NOTES
1. EXTERIOR BUILDING MATERIALS AND COLORS TO MATCH EXISTING BUILDINGS ON SITE.

TOOLING AND EQUIPMENT INTERNATIONAL FOUNDRY ADDITION

12550 AND 12560 TECH CENTER DRIVE, LIVONIA, MI

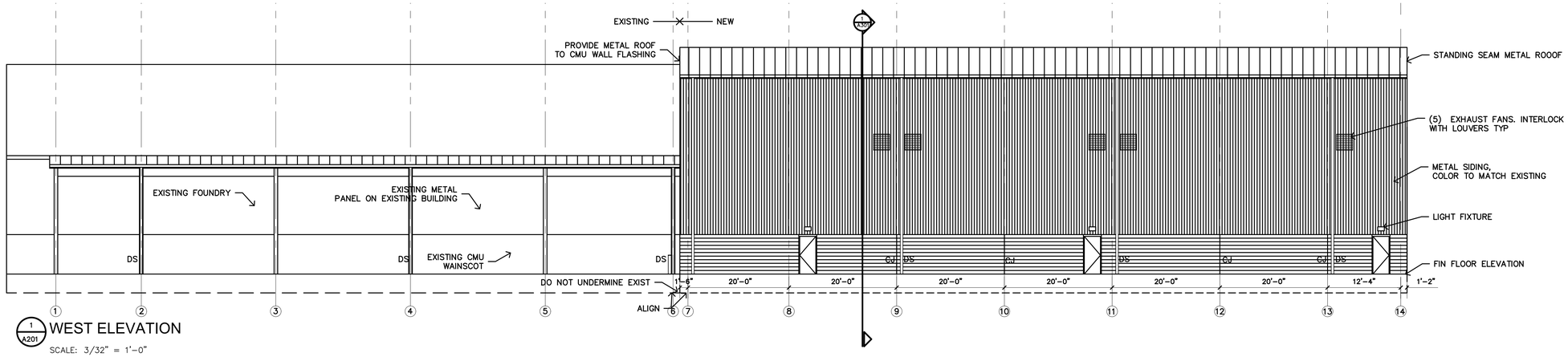

1/A201 WEST ELEVATION

SCALE: 3/32" = 1'-0"

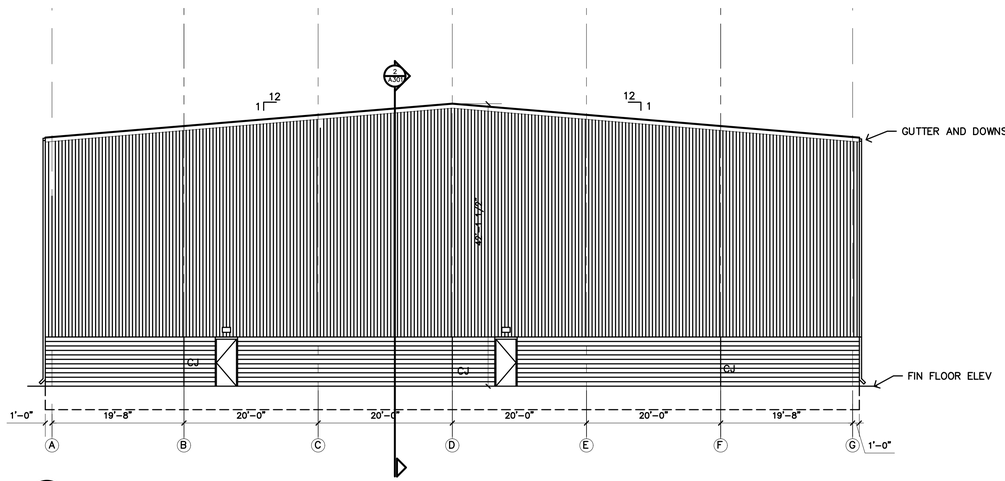

2/A201 SOUTH ELEVATION

SCALE: 3/32" = 1'-0"

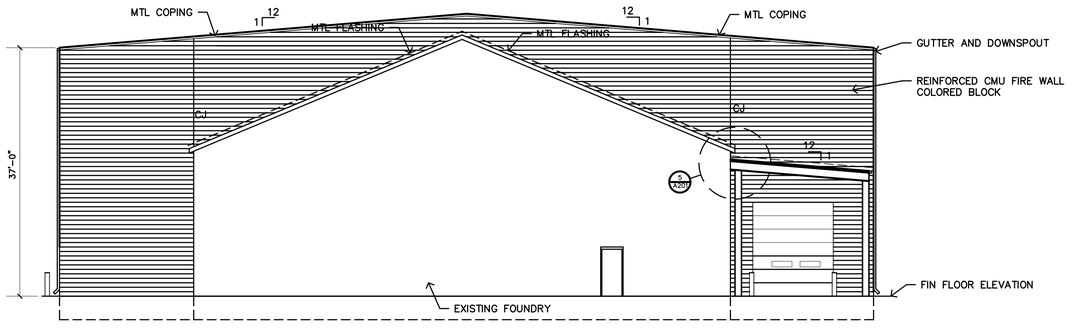

3/A201 NORTH ELEVATION

SCALE: 3/32" = 1'-0"

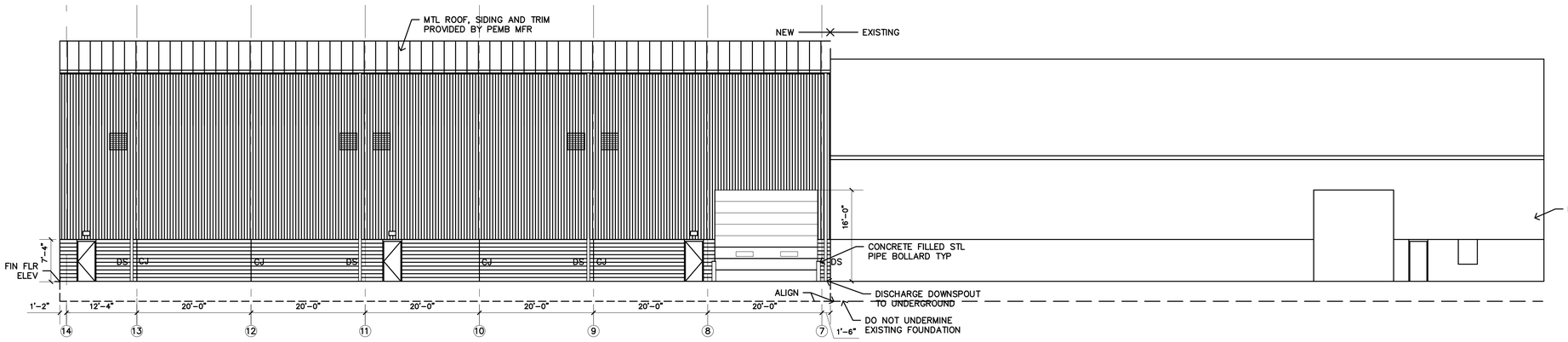

4/A201 EAST ELEVATION

SCALE: 3/32" = 1'-0"

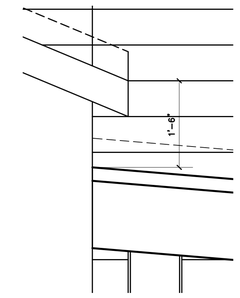

5/A201 SCALE: 3/4" = 1'-0"

VERIFY ALL DIMENSIONS IN FIELD
RELEASED FOR PERMITTING 4.16.21

HOPPE DESIGN, LLC
47032 McBRIDE, BELLEVILLE, MI 48111
734-218-2492

STATE OF MICHIGAN
WAYDE C. HOPPE
ARCHITECT
No. 1301036190
LICENSED ARCHITECT

WAYDE C. Hoppe

REVISIONS

PROJECT: 2003
DATE: 4.16.21
DRAWN: WCH
CHECKED: WCH

ELEVATIONS

COPYRIGHT ALL RIGHTS RESERVED BY WAYDE C. HOPPE, ARCHITECT
NOT TO BE COPIED OR REPRODUCED WITHOUT WRITTEN PERMISSION

A201

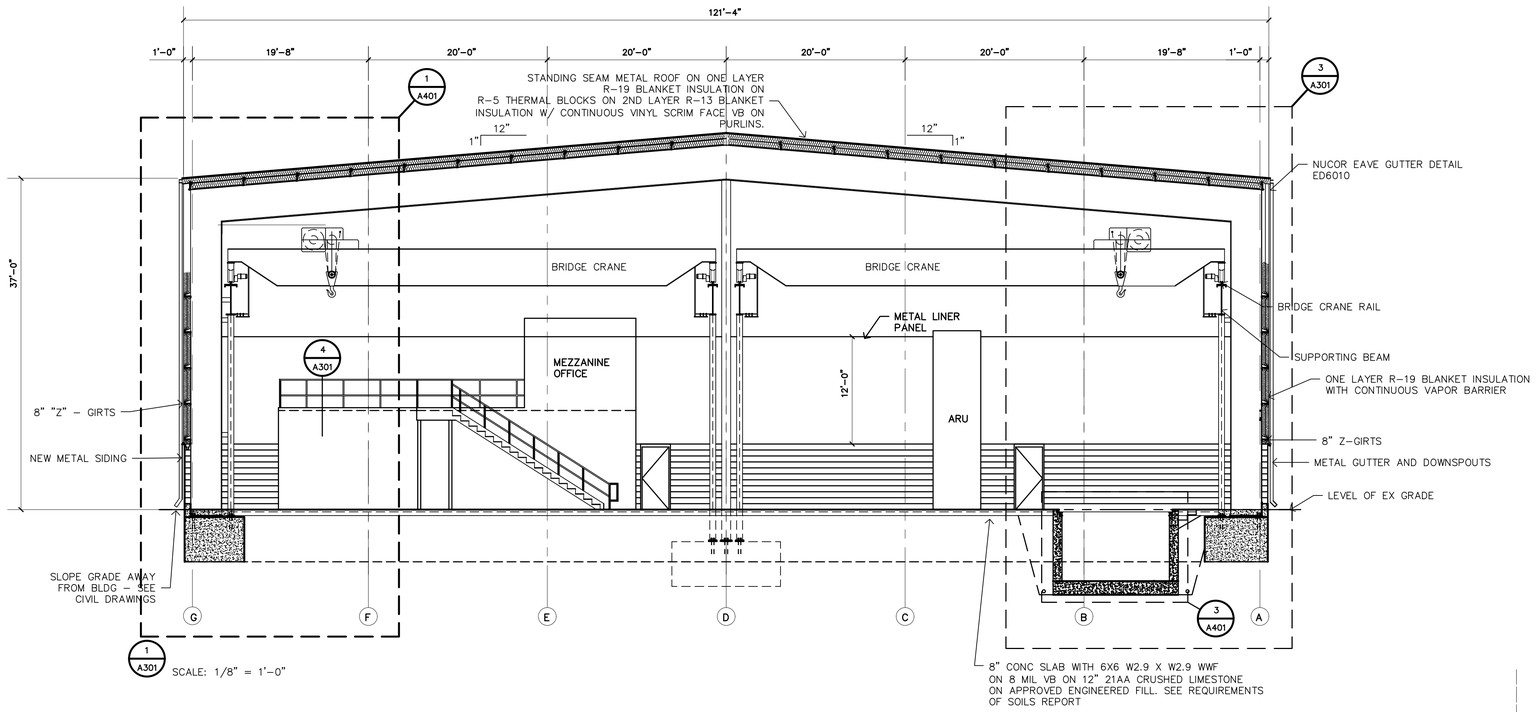

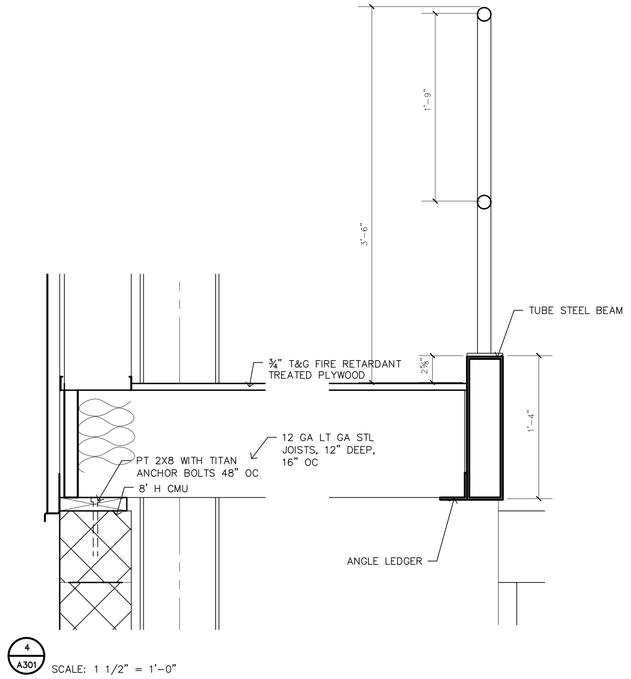

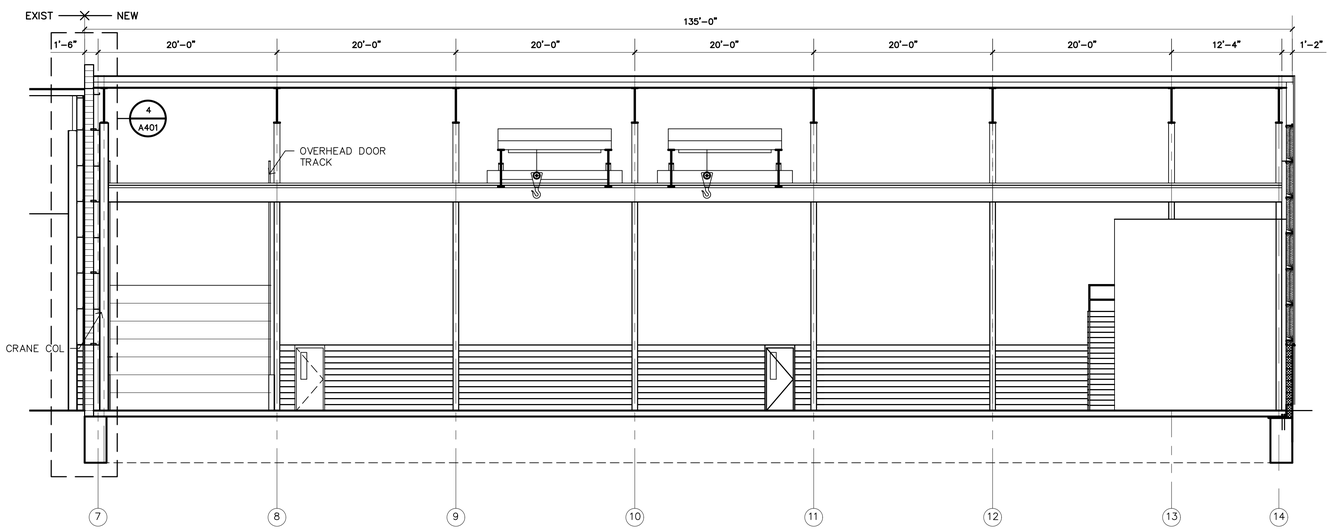

VERIFY ALL DIMENSIONS IN FIELD
RELEASED FOR PERMITTING 4.16.21

PRE-ENGINEERED METAL BUILDING
1. INTERIOR STEEL FINISH TO BE RED PRIMER
2. MTL LINER PANELS TO BE WHITE
3. VAPOR BARRIER TO BE WHITE
4. STEEL DOORS TO BE PRIMED AND PAINTED
5. STEEL DOOR FRAMES TO BE GALVANIZED AND PAINTED

TOOLING AND EQUIPMENT INTERNATIONAL FOUNDRY ADDITION

12550 AND 12560 TECH CENTER DRIVE, LIVONIA, MI

HOPPE DESIGN, LLC
47032 McBRIDE, BELLEVILLE, MI 48111
734-218-2492

STATE OF MICHIGAN
WAYDE C. HOPPE
ARCHITECT
No. 1301036190
LICENSED ARCHITECT

WAYDE C. HOPPE

REVISIONS

PROJECT: 2003
DATE: 4.16.21
DRAWN: WCH
CHECKED: WCH

BUILDING SECTIONS

A301

COPYRIGHT ALL RIGHTS RESERVED BY WAYDE C. HOPPE, ARCHITECT
NOT TO BE COPIED OR REPRODUCED WITHOUT WRITTEN PERMISSION

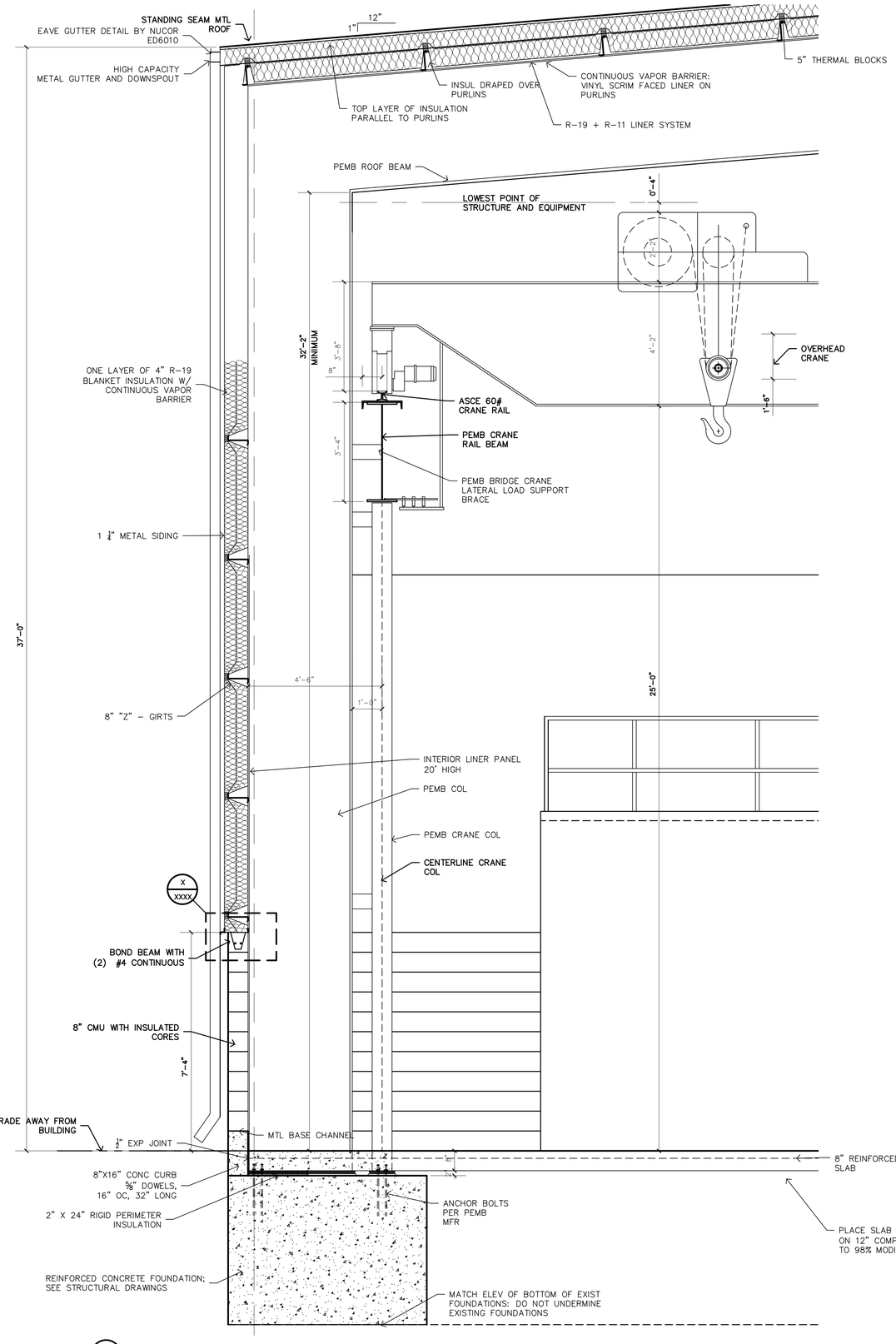

1 A401 SCALE: 3/4" = 1'-0"

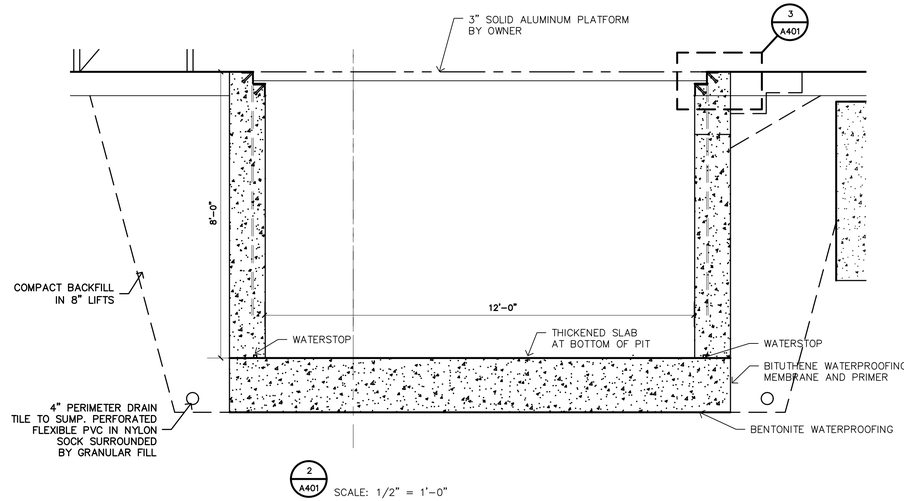

2 A401 SCALE: 1/2" = 1'-0"

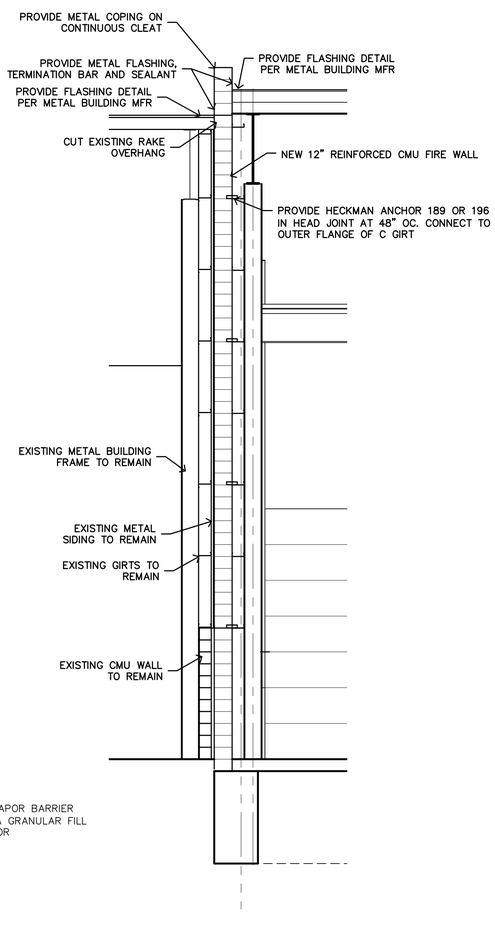

4 A401 SCALE: 1/4" = 1'-0"

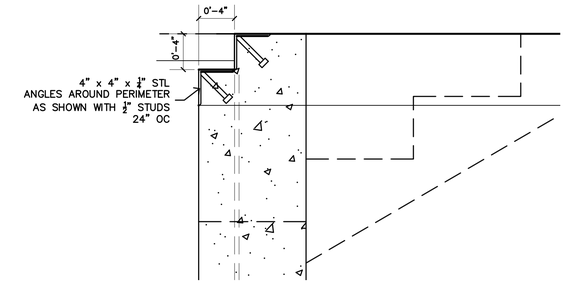

3 A401 SCALE: 1 1/2" = 1'-0"

NOTES:
1. ALL PERIMETER ANGLES MUST BE LEVEL AND FLUSH WITH THE EDGE OF CONCRETE

TOOLING AND EQUIPMENT INTERNATIONAL FOUNDRY ADDITION

12550 AND 12560 TECH CENTER DRIVE, LIVONIA, MI

HOPPE DESIGN, LLC
47032 McBRIDE, BELLEVILLE, MI 48111
734-218-2492

STATE OF MICHIGAN
WAYDE C. HOPPE
ARCHITECT
No. 1301036190
LICENSED ARCHITECT

WAYDE C. Hoppe

REVISIONS

PROJECT: 2003
DATE: 4.16.21
DRAWN: WCH
CHECKED: WCH

RELEASED FOR PERMITTING 4.16.21

BUILDING SECTIONS

A401

COPYRIGHT ALL RIGHTS RESERVED BY WAYDE C. HOPPE, ARCHITECT
NOT TO BE COPIED OR REPRODUCED WITHOUT WRITTEN PERMISSION

UNIT	DESCRIPTION	MANUFACTURER	MODEL	STYLE	FINISH	COLOR	POWER	STANDARDS/ RESPONSIBILITY	COMMENTS
				DIVISION 8					
	DOOR: INTERIOR METAL	STEELCRAFT	COMMERCIAL GRADE	18 GA	FACTORY FINISHED	BY OWNER	NA		16 GAUGE STEEL FRAMES WITH WELDED CORNERS AND FRAME REINFORCEMENT. ALL JOINTS WELDED AND GROUND SMOOTH. THREE FRAME ANCHORS MIN. PER JAMB; RUBBER BUMPERS
	DOOR: EXTERIOR METAL	STEELCRAFT, THERMA-TRU, LARSON, NATIONAL PRIDE	URETHANE INSULATION	16 GA STEEL	PAINT; GALVANIZED AT EXTERIOR	BY OWNER	N/A		18 GA STIFFENERS 6" OC; COLD ROLLED; PREFABRICATED BUCK, FRAME AND TRIM; 16 GAUGE STEEL FRAMES WITH WELDED CORNERS AND FRAME REINFORCEMENT. ALL JOINTS WELDED AND GROUND SMOOTH. THREE FRAME ANCHORS MIN. PER JAMB
	HARDWARE: EXIT	VON DUPRIN	9927L X 992L06		US26D	US26D SATIN CHROME	N/A		PANIC HARDWARE
	HARDWARE: CLOSER	LCN			ALUM	BY OWNER	N/A		KEY VALVES FOR BACKCHECK, SPEED AND LATCHING
	HARDWARE: HINGES	HAGER	BB1279NRP	4 1/2 X 4 1/2		US26D SATIN CHROME	N/A		CONCEALED BALL BEARING: AT EXTERIOR DOORS USE NON-REMOVEABLE PINS: LOCKABLE IN THE FULL OPEN POSITION: ATTACH WITH SEX BOLTS
	HARDWARE: THRESHOLD	NATIONAL GUARD	513 ALUM			BY OWNER	N/A		ADA
	HARDWARE: SWEEPS	NATIONAL GUARD	601A			BY OWNER	N/A		
	HARDWARE: WEATHERSTRIPPING	NATIONAL GUARD	190V		N/A	BY OWNER	N/A		
	SAFETY GLAZING		TEMPERED					ANSI 297.1	
				DIVISION 9					
	GYPSUM BOARD	US GYPSUM		5/8"	PRIME AND PAINT	BY OWNER	N/A		GLUE AND SCREW: 1 1/4" SCREW LENGTH MIN

DOOR SCHEDULE

NO.	DOORS – SIZES 1: 3'-0" X 7'-0" X 1 3/4"	2: 2'-6" X 7'-0" X 1 3/4"	3: 12' X 16' H OVERHEAD DOOR	4: 16' X 16' H OVERHEAD DOOR	5: 18' X 16' H OVERHEAD DOOR	TYPE	MODEL	DOOR MATERIALS 1: WOOD STAINED	2: WOOD PAINTED	3: HOLLOW METAL PAINTED	4: ALUMINUM	5: OVERHEAD	FRAMES – MATERIALS 1: WOOD STAINED	2: WOOD PAINTED	3: HOLLOW METAL PAINTED	4: ALUMINUM	5		DETAILS: JAMB	HEAD	SILL	DOOR AND FRAME FIRE RATING	REMARKS
101					X	B																	
102				X		B																B	FIRE RATED COILING DOOR W/ AUTO CLOSER
103			X			B																B	FIRE RATED COILING DOOR W/ AUTO CLOSER
104	X					C				X					X								HARDWARE SET 1
105	X					C				X					X								HARDWARE SET 1
106	X					C				X					X								HARDWARE SET 1
107	X					C				X					X								HARDWARE SET 1
108	X					C				X					X								HARDWARE SET 1
109	X					C				X					X								HARDWARE SET 1
110	X					C				X					X								HARDWARE SET 1
111	X					C				X					X								HARDWARE SET 1
112	X					A				X					X							B	
113	X					A				X					X								
114	X					A				X					X								
115	X					C				X					X								
116	X					C				X					X								
117	X					C				X					X								
118		X				C				X					X								

NO.	LATCH: PASSAGE	PRIVACY	LOCK: STOREROOM	OFFICE	ADAMS RITE	VONDUPRIN	HINGES: 1 1/2 PAIR	2 PAIR	3 PAIR: SELF CLOSING	CLOSER: LCN 4011_H_TBWMS PULL VERIFY HANDING	LCN 4111_H_TBWMS PUSH VERIFY HANDING	KICK: 12" BRONZE	18" BRONZE	STOP: WALL BALDWIN 4045	FLOOR BALDWIN 4510	PUSH PLATE IVES 8200 3" X 12"	PULL IVES 8103-0	DEADBOLT	THRESHOLD	BI-FOLD	CYLINDER	WEATHERSTRIPPING	POCKET	FLLUSH BOLTS TOP AND BOTTOM
101																								
102																								
103																								
104–111																								
112						X	X			X		X												
113				X			X			X		X		X										
114	X						X			X		X			X									
115			X				X			X		X		X										
116							X				X	X		X		X	X							
117		X					X			X		X		X										
118			X				X				X	X												

1. ALL HARDWARE @ ALUM DOORS BY ALUM DOOR SUPPLIER. HARDWARE BASED ON "KAWNEER"; MFG TO SUPPLY CYLINDER.
2. ALUM DOOR HARDWARE SHALL MATCH DOOR FINISH.
3. ALUM DOORS AND DOOR FRAMES SHALL BE KAWNEER "HEAVY WALL" OR EQUAL, 0.188" WALL THICKNESS.
4. ALUM DOORS AND FRAMES SHALL BE GLAZED WITH TEMPERED GLASS. EXTERIOR DOORS AND FRAMES SHALL BE 1" INSULATED GLASS.
5. ALL HM OR WOOD DOORS AND FRAMES SHALL BE GLAZED WITH TEMPERED GLASS, EXCEPT FIRE RATED DOORS AND FRAMES.
6. FIRE RATED DOORS AND FRAMES SHALL BE GLAZED WITH LABELED FIRE/SAFETY RATED GLASS TO MATCH FIRE RATING AND AS FOLLOWS:
   20 & 45 MIN – 1296 SQ IN MAX GLASS SIZE.
   60 & 90 MIN – 100 SQ IN MAX GLASS SIZE.
7. FIRE RATED DOORS TO HAVE STEEL BALL BEARING HINGES.
8. WOOD DOORS TO BE 1¾" THICK.

HARDWARE SET #1
3 HINGES: HAGAR, BB1279 US26D 4 ½" X 4 ½"
1 CLOSER: LCN, RW–PA TB 689 ALUM
1 EXIT DEVICE: VON DUPRIN, 997SL–L–M–03–4–US26D
1 THRESHOLD: NATIONAL GUARD, 513 ALUM
WEATHERSTRIP: NATIONAL GUARD, 190V
1 SWEEP: NATIONAL GUARD, 601A W/ ADJUSTING CAPABILITY
1 CYLINDER: SAME AS MANUFACTURER OF EXIT DEVICE– MATCH KEYING SYSTEM

CHI MODEL #3216 INSULATED OVERHEAD DOORS, FOAM IN PLACE, R–17.54; WHITE; 2" CLIP MOUNT TRACK WITH HIGH LIFT ROOFLINE PITCH TRACKS; 1" SOLID SHAFTS HIGH CYCLE SPRINGS 25,000 CYCLES; WEATHER SEALS; LIFTMASTER OPERATOR MODEL #J–50–11–L4 WITH SAFETY EYS 115 VOLT, ½ HP, WITH (1) 3 BUTTON CONTROL STATION AT EACH UNIT.

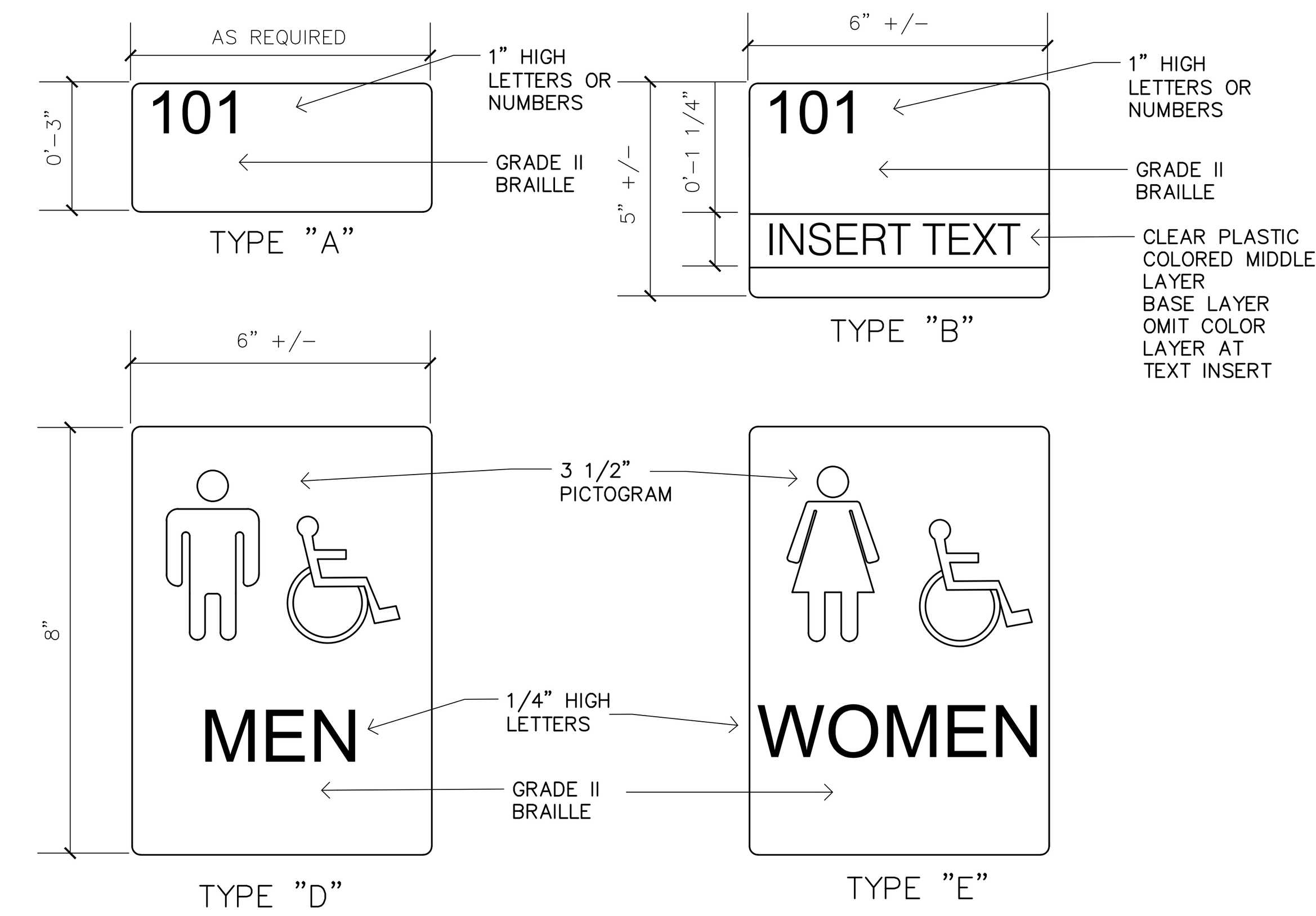

1. SIGN MATERIAL SHALL BE MAPLE AS MANUFACTURED AND SUPPLIED BY MODA: 248–306–0677.
2. LETTERS SHALL BE RAISED 1/32": DIMENSIONS SHALL BE 7" H X 9.75" W.
3. PICTOGRAMS AND LETTERS SHALL BE CONTRASTING COLOR.
4. COMPLY WITH CABO/ANSI A117.1–1998 SECTION 703 SIGNAGE.
5. RESTROOM SIGNAGE TO BE MODEL SA64 BY MODA
6. ROOM ID SIGNAGE TO MODEL SA65 BY MODA

SIGNAGE

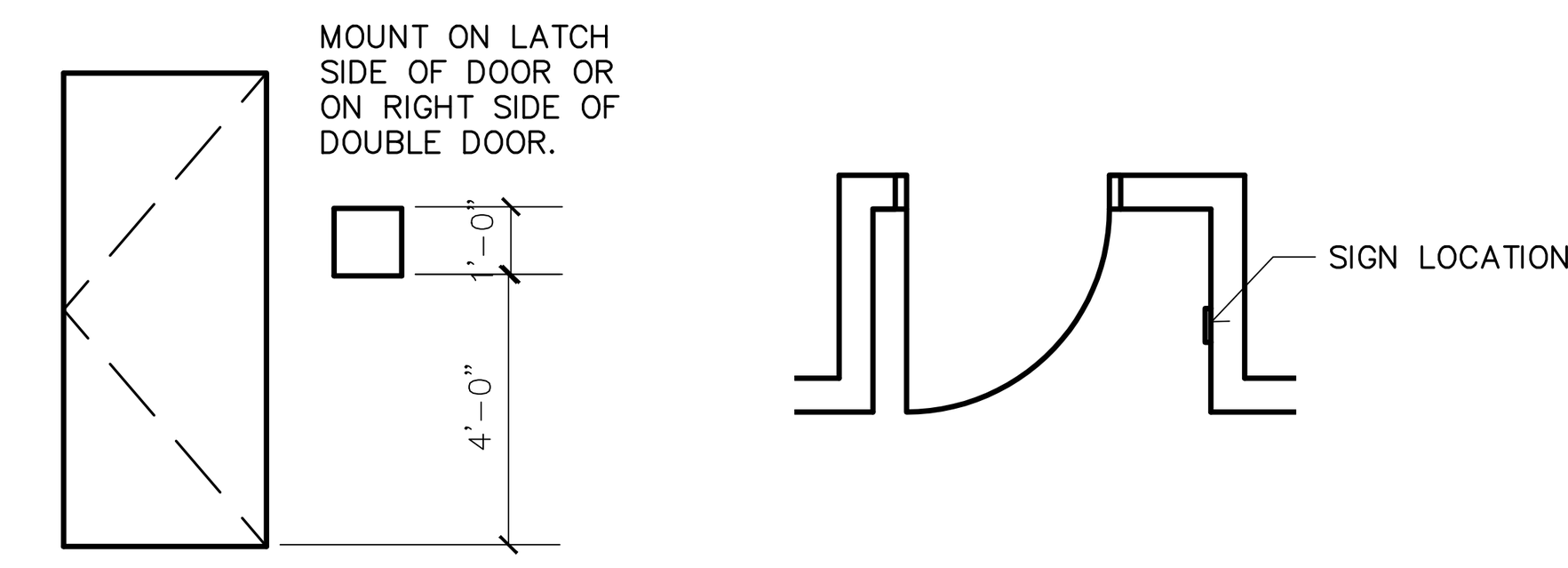

SIGN MOUNTING LOCATION
SCALE: 1/4"=1'–0"

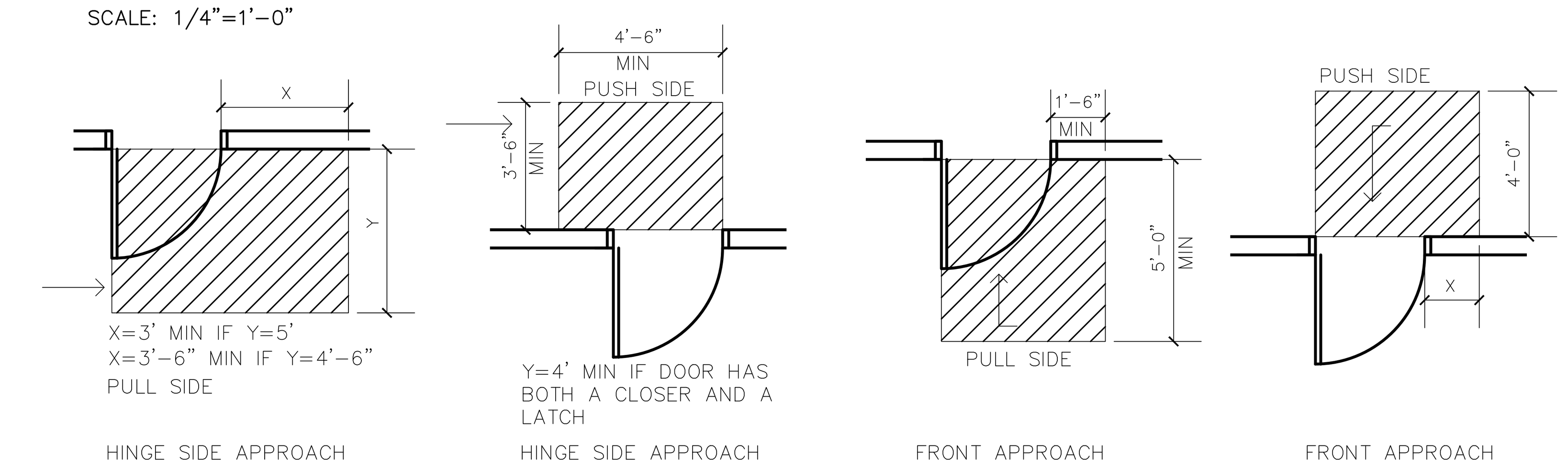

BARRIER FREE DOOR APPROACH
SCALE: 1/4"=1'–0"

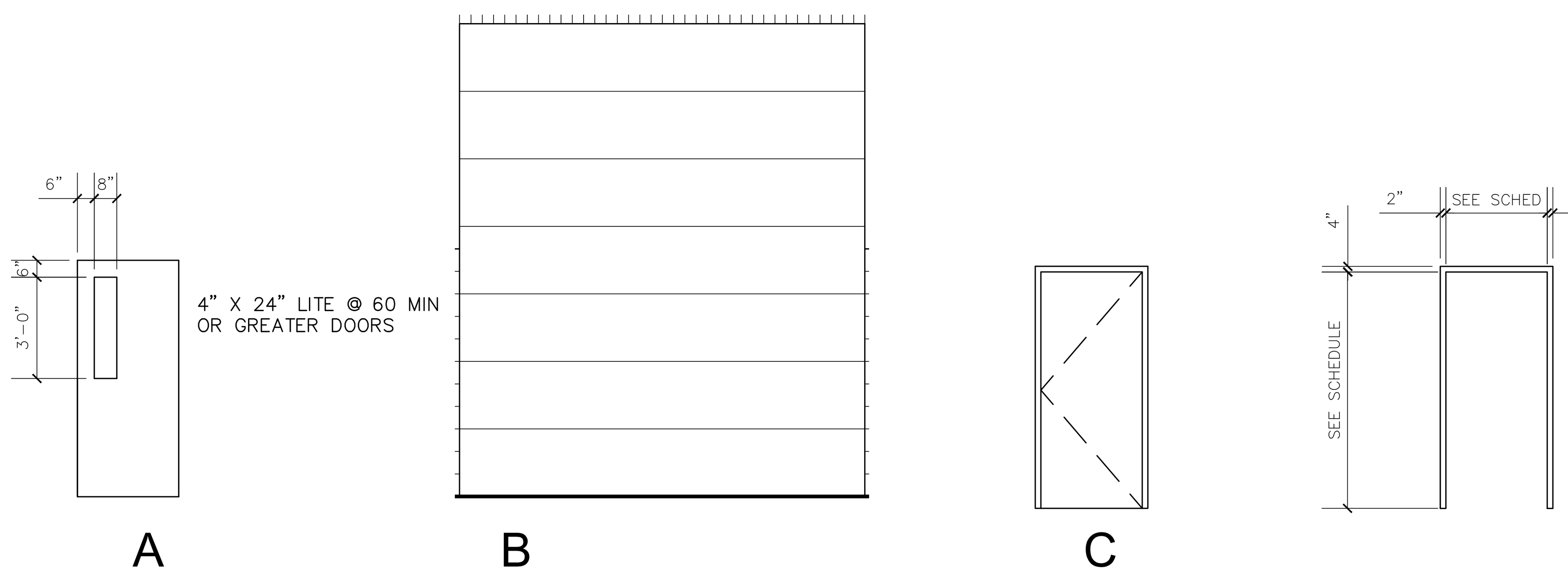

DOOR TYPES
SCALE: 1/4" = 1'–0"
ALL WINDOW GLAZING TO BE TEMPERED.

ROOM FINISH SCHEDULE

NO.	RM. NAME	FLOOR 1: CPT TILE	2: VINYL TILE	3: CERAMIC TILE	4: WOOD	5: CPT	6: FINISHED CONCRETE	7: UNFINISHED	BASE 1: VINYL	2: RUBBER	3: CERAMIC BASE	4: WOOD: PAINTED	5: WOOD STAINED	NORTH 1: GWB PAINTED	2: ACROVYN WAINSCOT	3: CERAMIC TILE WAINSCOT	4: PAINT EXISTING	SOUTH 1: GWB PAINTED	2: ACROVYN WAINSCOT	3: CERAMIC TILE WAINSCOT	4: PAINT EXISTING	EAST 1: GWB PAINTED	2: ACROVYN WAINSCOT	3: CERAMIC TILE WAINSCOT	4: PAINT EXISTING	WEST 1: GWB PAINTED	2: ACROVYN WAINSCOT	3: CERAMIC TILE WAINSCOT	4: PAINT EXISTING	CEILING MATERIALS 1: PAINTED GWB	2: 2 X 2ACT	3: 2x4 VINYL FACED GYP	4: PAINTED EXPOSED	HEIGHT	REMARKS
101	FOUNDRY						X																												
113	OFFICE	X							X					X				X				X				X					X			8'-0"	
114	BREAK ROOM	X							X					X				X				X				X					X			8'-0"	
116	MEN'S TOILET			X							X					X				X				X				X			X			8'-0"	4' H TILE WAINSCOT
116A	MEN'S LOCKER			X							X					X				X				X				X		X	X			8'-0"	4' H TILE WAINSCOT
117	WOMEN'S TOILET			X							X					X				X				X				X		X	X			8'-0"	4' H TILE WAINSCOT
118	JANITOR'S CLOSET		X						X					X				X				X				X					X			8'-0"	

BARRIER FREE FIXTURE HEIGHTS

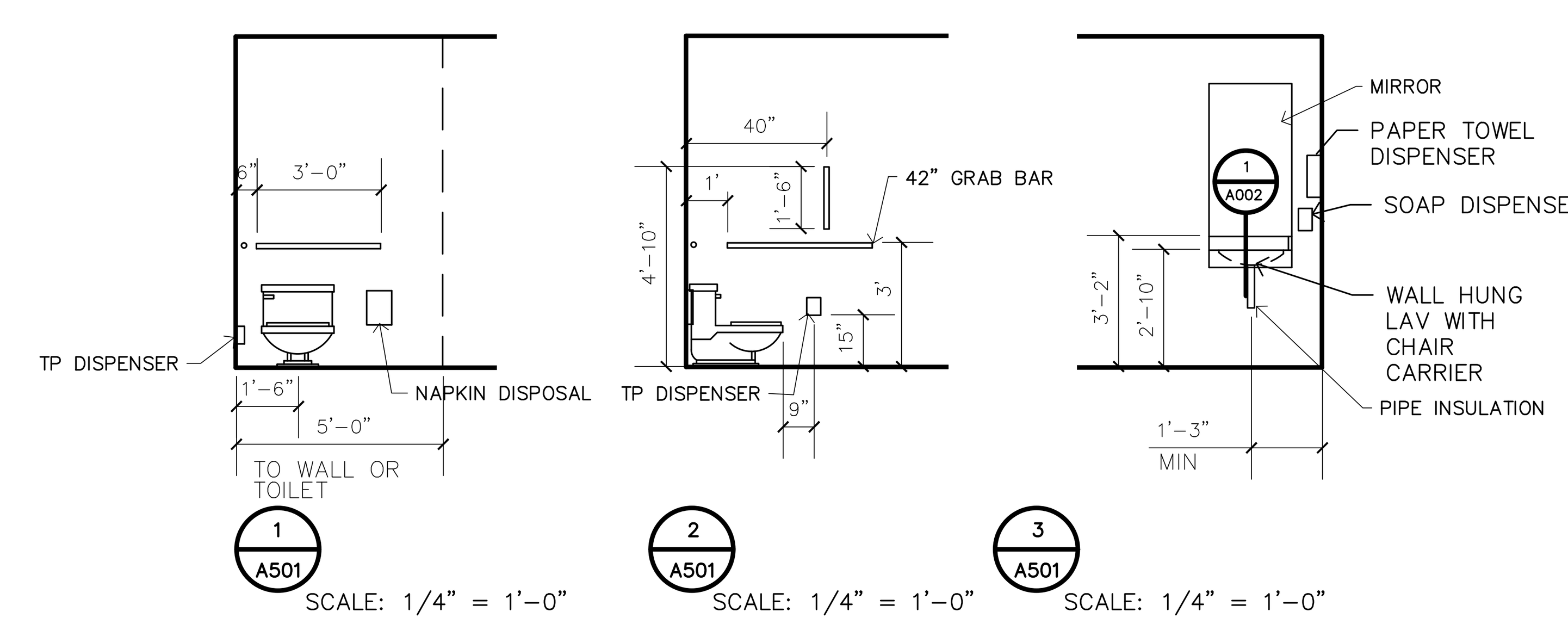

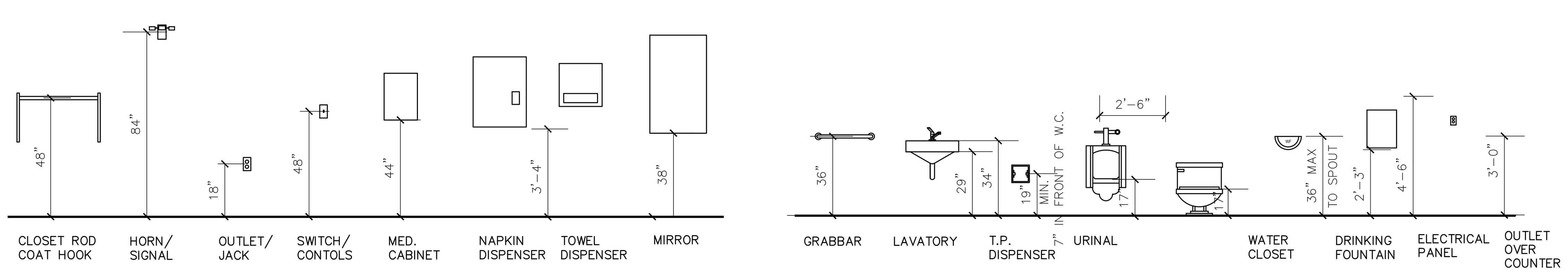

BARRIER FREE FIXTURE HEIGHTS

	LIVING UNIT	PUBLIC
LIGHT PANELS	60" TO TOP	48" TO TOP
SWITCHES, CONTROLS, PULLS	48" TO C.L.	48" TO C.L.
ELECTRIC OUTLETS AT FLOOR	24" TO C.L.	24" TO C.L.
ELECTRIC OULTETS AT COUNTERS	48" TO C.L.	42" TO C.L.
CLOSET ROD AND COAT HOOKS	62"–66"	54" MAX
MEDICINE CABINET	52" TO BOTTOM	44" TO BOTTOM
MIRROR	48" TO BOTTOM	38" TO BOTTOM
HORNS AND SIGNALS	84" TO C.L.	84" TO C.L.
DRINKING FOUNTAIN SPOUT	36" MAX	36" MAX.
GRAB BARS		33"–36" TO TOP
T.P. DISPENSER		18"–48" TO C.L. 7" IN FRONT OF W.C.

DIMENSIONS FROM FINISHED FLOOR UNLESS NOTED OTHERWISE

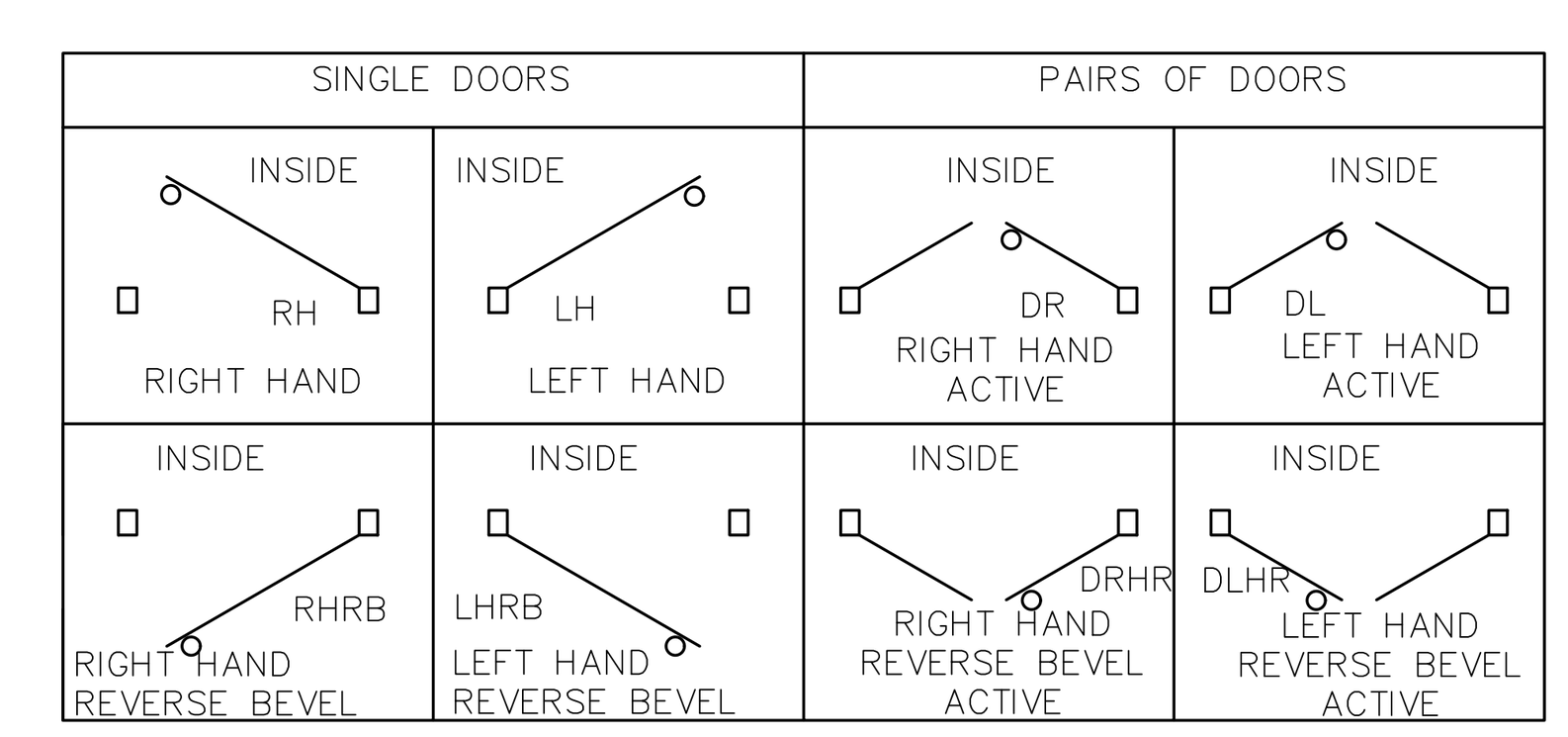

TOOLING AND EQUIPMENT INT FOUNDRY ADDITION
12550 AND 12560 TECH CENTER DRIVE, LIVONIA, MI

HOPPE DESIGN, LLC
47032 McBRIDE, BELLEVILLE, MI 48111
734-218-2492

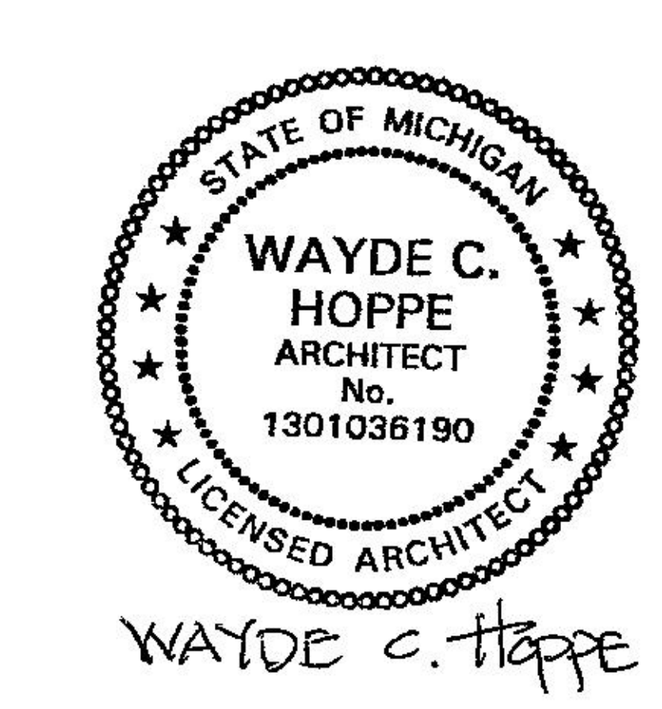

REVISIONS

PROJECT: 2003
DATE: 4.16.21
DRAWN: WCH
CHECKED: WCH

VERIFY ALL DIMENSIONS IN FIELD
RELEASED FOR PERMITTING 4.16.21

SCHEDULES

COPYRIGHT ALL RIGHTS RESERVED BY WAYDE C. HOPPE, ARCHITECT
NOT TO BE COPIED OR REPRODUCED WITHOUT WRITTEN PERMISSION

A501

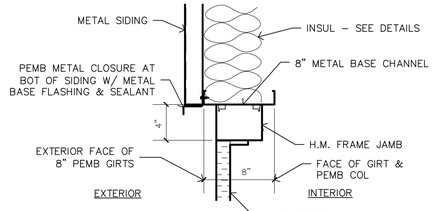

1 A502 SCALE: 1 1/2" = 1'–0"

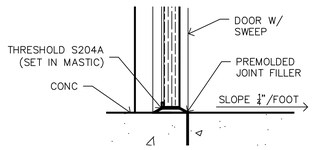

2 A502 SCALE: 1 1/2" = 1'–0"

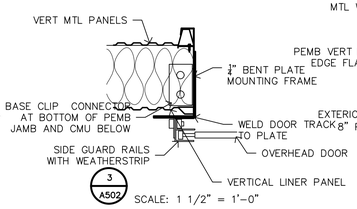

3 A502 SCALE: 1 1/2" = 1'–0"

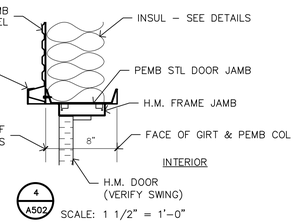

4 A502 SCALE: 1 1/2" = 1'–0"

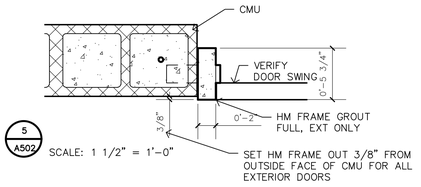

5 A502 SCALE: 1 1/2" = 1'–0"

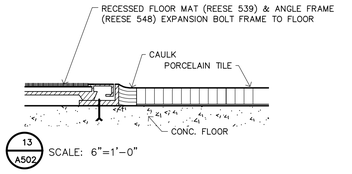

13 A502 SCALE: 6"=1'–0"

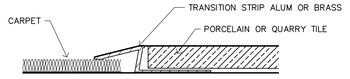

14 A502 SCALE: 6"=1'–0"

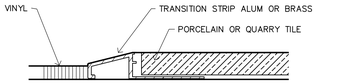

15 A502 SCALE: 6"=1'–0"

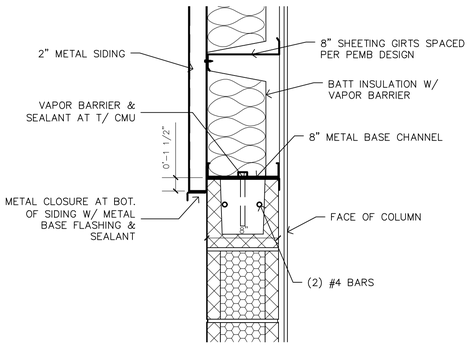

6 A502 SCALE: 1 1/2" = 1'–0"

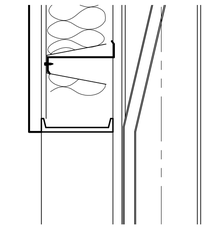

8 A502 SCALE: 1 1/2" = 1'–0"

9 A502 SCALE: 1 1/2" = 1'–0"

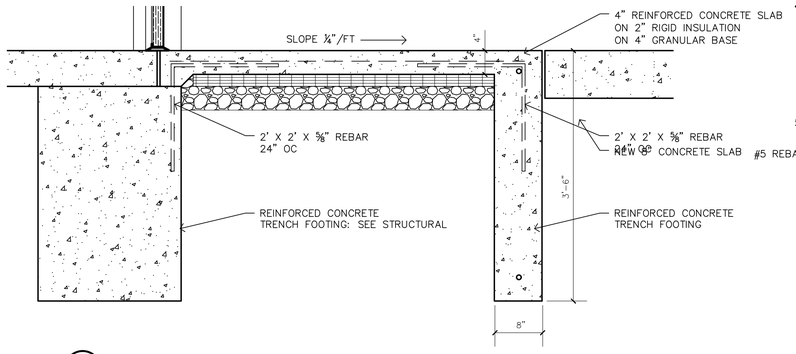

7 A502 SCALE: 1" = 1'–0"

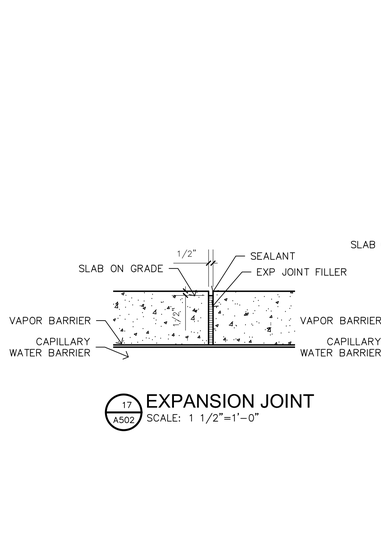

17 A502 EXPANSION JOINT SCALE: 1 1/2"=1'–0"

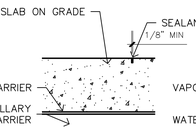

18 A502 CONTROL JOINT SCALE: 1 1/2"=1'–0"

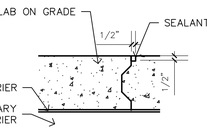

19 A502 CONSTRUCTION JOINT SCALE: 1 1/2"=1'–0"

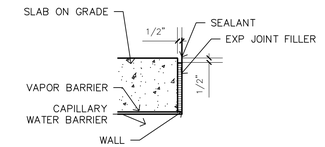

20 A502 SLAB EDGE SCALE: 1 1/2"=1'–0"

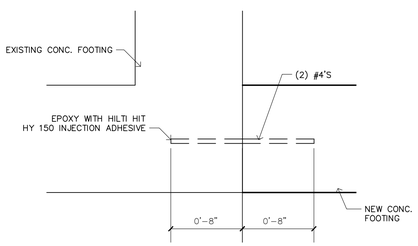

10 A502 SCALE: 1 1/2" = 1'–0"

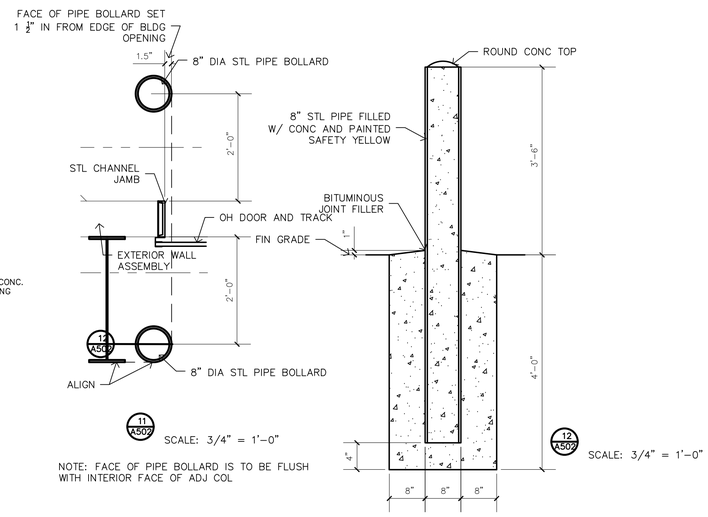

11 A502 SCALE: 3/4" = 1'–0"

12 A502 SCALE: 3/4" = 1'–0"

NOTE: FACE OF PIPE BOLLARD IS TO BE FLUSH WITH INTERIOR FACE OF ADJ COL

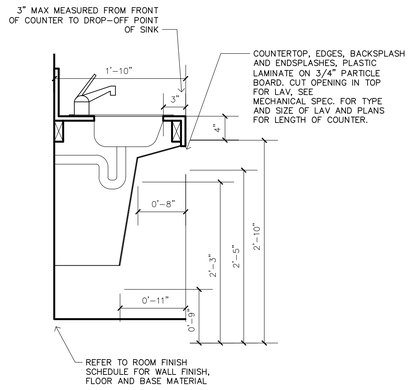

EXPOSED WATER SUPPLY AND DRAINAGE PIPES BELOW LAVATORIES OR SINKS MUST BE INSULATED OR OTHERWISE POSITIONED TO PROTECT AGAINST CONTACT. THERE MUST BE NO SHARP OR ABRASIVE SURFACES BELOW LAV.

16 A502 SCALE: 1" = 1'–0"

VERIFY ALL DIMENSIONS IN FIELD
RELEASED FOR PERMITTING 4.16.21

METAL STUD SIZING

ALLOWABLE HEIGHTS

STUD SIZE	16" OC/ 33 KSI **
3 ½" OR 4" X 20 GA	13'–11"
3 ½" OR 4" X 18 GA	18'–2"
3 ½" OR 4" X 16 GA	19'–6"
5 ½" OR 6" X 20 GA	23'–11"
5 ½" OR 6" X 18 GA	27'–2"
5 ½" OR 6" X 16 GA	30'–0"

** HEIGHTS BASED ON 16" OC STUD SPACING, 5 PSF LATERAL LOAD, L/240 DEFLECTION, NON–STRUCTURAL APPLICATION. BRIDGING AT MIDPOINTS OR 8'–0" MAX

STUD SIZE	16" OC/33 KSI***	12" OC/33 KSI***
3 ½" OR 4" X 20 GA	11'–0"	12'–3"
3 ½" OR 4" X 18 GA	12'–0"	13'–3"
3 ½" OR 4" X 16 GA	13'–0"	14'–3"
5 ½" OR 6" X 20 GA	16'–4"	18'–0"
5 ½" OR 6" X 18 GA	18'–0"	19'–8"
5 ½" OR 6" X 16 GA	19'–3"	21'–3"
5 ½" OR 6" X 12 GA	22'–9"	28'–0"
8" X 20 GA	20'–6"	22'–8"
8" X 18 GA	22'–6"	24'–9"
8" X 16 GA	24'–3"	26'–8"
8" X 12 GA	28'–9"	31'–8"

STUD SIZE	16" OC/50 KSI***	12" OC/50 KSI***
3 ½" OR 4" X 20 GA	12'–0"	13'–6"
3 ½" OR 4" X 18 GA	13'–3"	14'–8"
3 ½" OR 4" X 16 GA	14'–3"	15'–8"
5 ½" OR 6" X 20 GA	18'–0"	20'–0"
5 ½" OR 6" X 18 GA	19'–8"	21'–8"
5 ½" OR 6" X 16 GA	21'–3"	23'–4"
5 ½" OR 6" X 12 GA	28'–0"	31'–0"
8" X 20 GA	22'–6"	25'–0"
8" X 18 GA	24'–9"	27'–3"
8" X 16 GA	26'–8"	29'–4"
8" X 12 GA	31'–8"	34'–9"

*** HEIGHTS BASED ON 20 PSF LATERAL LOAD, L/240 DEFLECTION, STRUCTURAL APPLICATION. BRIDGING AT ⅓ POINTS OR 8'–0" MAX.

DETAILS

COPYRIGHT ALL RIGHTS RESERVED BY WAYDE C. HOPPE, ARCHITECT
NOT TO BE COPIED OR REPRODUCED WITHOUT WRITTEN PERMISSION

STATE OF MICHIGAN
WAYDE C. HOPPE
ARCHITECT
No. 1301036190
LICENSED ARCHITECT
WAYDE C. HOPPE

HOPPE DESIGN, LLC
47032 McBRIDE BELLEVILLE, MI 48111
734-218-2492

REVISIONS

PROJECT: 2003
DATE: 4.16.21
DRAWN: WCH
CHECKED: WCH

A502

TOOLING AND EQUIPMENT INT
FOUNDRY ADDITION
12550 AND 12560 TECH CENTER DRIVE, LIVONIA, MI

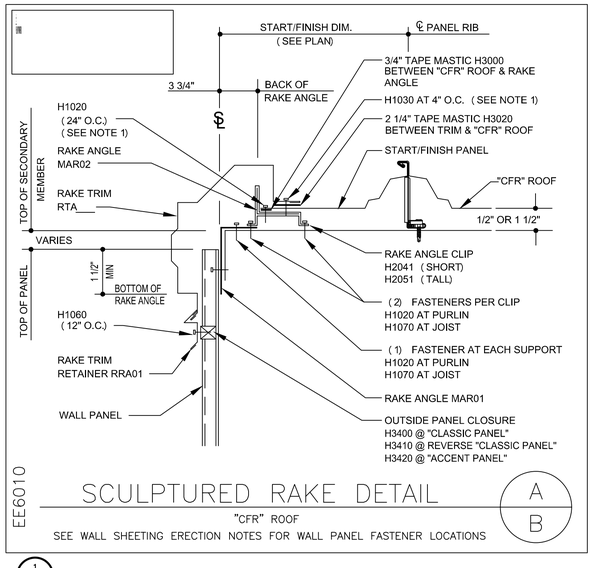

1 / A503 SCALE: NOT TO SCALE

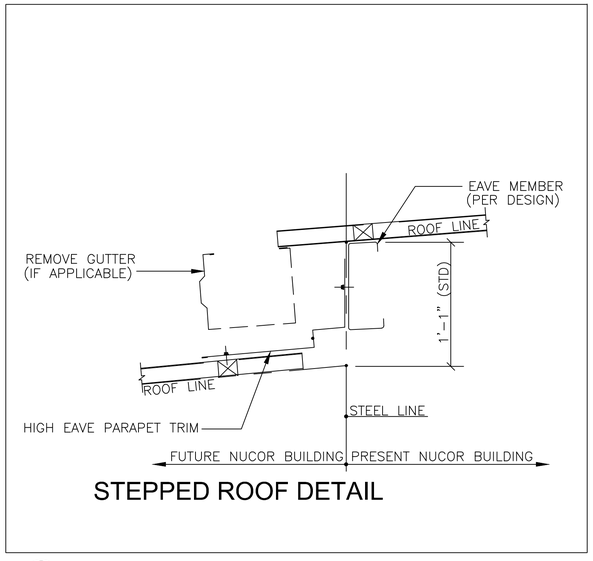

2 / A503 SCALE: NOT TO SCALE

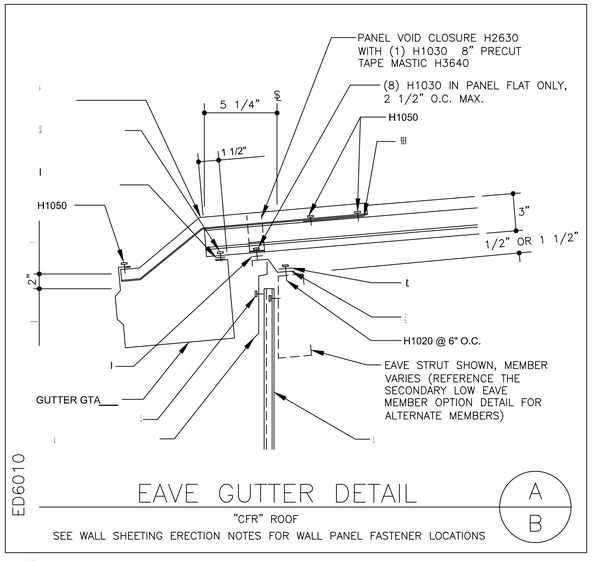

3 / A503 SCALE: NOT TO SCALE

VERIFY ALL DIMENSIONS IN FIELD
RELEASED FOR PERMITTING 4.16.21

TOOLING AND EQUIPMENT INT
FOUNDRY ADDITION

12550 AND 12560 TECH CENTER DRIVE, LIVONIA, MI

HOPPE DESIGN, LLC
47032 McBRIDE, BELLEVILLE, MI 48111
734-218-2492

REVISIONS

PROJECT: 2003
DATE: 4.16.21
DRAWN: WCH
CHECKED: WCH

PEMB DETAILS

A503

COPYRIGHT ALL RIGHTS RESERVED BY WAYDE C. HOPPE, ARCHITECT
NOT TO BE COPIED OR REPRODUCED WITHOUT WRITTEN PERMISSION

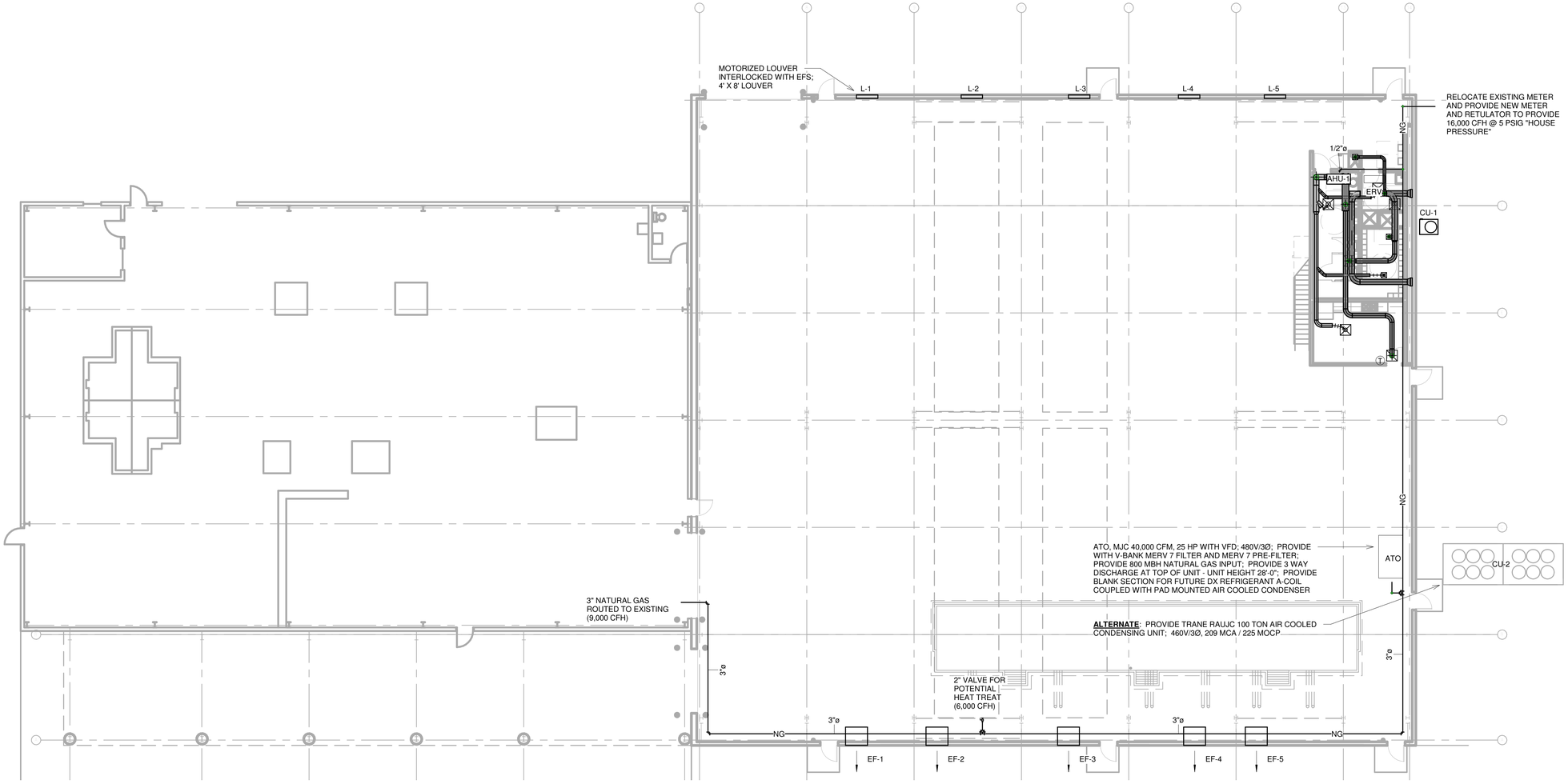

1 FOUNDRY HEATING AND VENTILATING PLAN
3/32" = 1'-0"

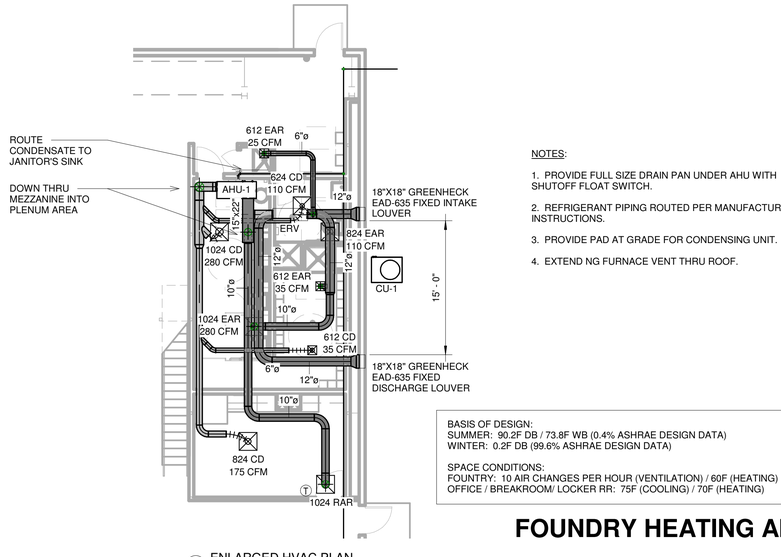

2 ENLARGED HVAC PLAN
1/8" = 1'-0"

NATURAL GAS PIPE SIZING - GREATER THAN 1.5 PSI		
Longest Run:	500	ft
Inlet Pressure	5	PSI
Final Pressure	2	PSI
Pipe (nom)	Pipe (ID)	CFH max
0.5	0.62	368.2
0.75	0.82	766.9
1	1.05	1467.5
1.5	1.61	4506.2
2	2.07	8715.2
2.5	2.47	13856.7
3	3.07	24520.9

NATURAL GAS PIPE SIZING

NOTES:

1. PROVIDE FULL SIZE DRAIN PAN UNDER AHU WITH SHUTOFF FLOAT SWITCH.
2. REFRIGERANT PIPING ROUTED PER MANUFACTURER'S INSTRUCTIONS.
3. PROVIDE PAD AT GRADE FOR CONDENSING UNIT.
4. EXTEND NG FURNACE VENT THRU ROOF.

BASIS OF DESIGN:
SUMMER: 90.2F DB / 73.8F WB (0.4% ASHRAE DESIGN DATA)
WINTER: 0.2F DB (99.6% ASHRAE DESIGN DATA)

SPACE CONDITIONS:
FOUNTRY: 10 AIR CHANGES PER HOUR (VENTILATION) / 60F (HEATING)
OFFICE / BREAKROOM/ LOCKER RR: 75F (COOLING) / 70F (HEATING)

STATE OF MICHIGAN JEFFREY RICE ENGINEER NO. 6201039644 REGISTERED PROFESSIONAL 05/18/21

TOOLING AND EQUIPMENT INTERNATIONAL
FOUNDRY ADDITION
12550 AND 12560 TECH CENTER DRIVE, LIVONIA, MI

ENGINEERING BY:
GODWIN + ASSOCIATES
architects & engineers
1200 East Woodhurst, D-100 | Springfield | Missouri 65804 | (417) 887-2667 | Fax (417) 887-3215

HOPPE DESIGN, LLC
47032 McBRIDE, BELLEVILLE, MI 48111
734-218-2492

REVISIONS

PROJECT: 2003
DATE: 05/18/21
DRAWN: JAR
CHECKED: JAR

FOUNDRY HEATING AND VENTILATING PLAN

M-1

FAN SCHEDULE

TAG	MODEL #	TYPE	DRIVE	DESIGN AIRFLOW (CFM)	DESIGN ESP (IN H2O)	RPM	SONES	DAMPER	ROOF/WALL OPENING	ELEC	UNIT WEIGHT	LOCATION
EF-1 - 5	COOK M# 42XMPH	WALL PROP	BELT	22,000	0.1	742	-	MOTORIZIED	49.25 X 49.25	5 HP; 460V/3Ø	428	FOUNDRY

AHU SCHEDULE

TAG	MODEL #	TYPE	AMBIENT TEMP (F)	DESIGN AIRFLOW (CFM)	VENTILATION AIRFLOW (CFM)	DESIGN ESP (IN H2O)	NET LATENT CAPACITY (MBH)	NET SENSIBLE CAPACITY (MBH)	NET TOTAL CAPACITY (MBH)	HEATING INPUT (MBH)	HEATING OUTPUT (MBH)	VOLTAGE	MCA	MOP	UNIT WEIGHT	AREA
AHU-1	TRANE M# 4TXC+S9X1B	SPLIT DX, NAT GAS FURNACE	95.0	600	450	0.5	5.0	14.1	19.1	40	38.8	120V/1Ø	8.8	15	50	SERVER ROOM

PROVIDE WITH ERV (RENEWAIRE EV450; 208/230V/1Ø, 4.9 MCA / 15 MOCP; 0.6 HP, 458 VENTILATION AIR, 450 EXHAUST AIR) - SEE DETAIL M-3

CONDENSING UNIT SCHEDULE

TAG	MODEL #	AMBIENT TEMP (F)	CONNECTIONS		COMPRESSOR (RLA)	CONDENSER	VOLTAGE	MCA	MOP	UNIT WEIGHT	LOCATION
			SUCTION	LIQUID							
CU-1	TRANE M# 4TTR3018H1	95.0	5/8	3/8	6.7	0.7 FLA	208V/1Ø	12	20	165	BREAK / RR AREA
CU-2	TRANE M# RAUJ	95.0	2-5/8	1-1/8	25.4 X 4; 37.2 X 2	1.8 FLA X 12	460VV/3Ø	209	225	5700	**ALTERNATE** FOUNDRY AREA

ATO SCHEDULE

TAG	MODEL #	TYPE	AMBIENT TEMP (F)	DESIGN AIRFLOW (CFM)	VENTILATION AIRFLOW (CFM)	DESIGN ESP (IN H2O)	NET LATENT CAPACITY (MBH)	NET SENSIBLE CAPACITY (MBH)	NET TOTAL CAPACITY (MBH)	HEATING INPUT (MBH)	HEATING OUTPUT (MBH)	VOLTAGE	MCA	MOP	AREA
ATO-1	MJC M# 100TON	SPLIT DX, NAT GAS FURNACE	95.0	40,000	-	0.5	--	--	1,200	800	640	460V/3Ø	--	--	FOUNDRY

COOLING IS ALTERNATE/FUTURE - PROVIDE WITH BLACK SECTION FOR DUTURE DX REFRIGERANT A-COIL
PROVIDE WITH V-BANK FILTER SECTION (MERV 7) AND PREFILTER SECTION (MERV 7).
28" TALL.
3 WAY DISTRIBUTION AT TOP OF UNIT.

HVAC DRAWING NOTES:

1. VERIFY ROOF AND WALL OPENING SIZES WITH EQUIPMENT MANUFACTURER.
2. LOCATE UNIT THERMOSTATS ON WALL AT "EYE" LEVEL (4'-0" ABOVE FLOOR) IN FINISHED OFFICE AREAS.
3. COORDINATE WITH ELECTRICAL DRAWINGS AND SPECIFICATIONS FOR WIRING OF HVAC UNIT FIRE PROTECTION DETECTOR REQUIREMENTS. ELECTRICAL CONTRACTOR TO FURNISH/MECHANICAL MOUNT DUCT DETECTORS WITH FIRE ALARM SYSTEM.
4. PROVIDE SHUT-OFF VALVE, REGULATOR AND UNIONS AND DRIPLEG AT ALL GAS CONNECTIONS TO EQUIPMENT. PROVIDE MAIN SHUT-OFF VALVE AT SERVICE ENTRANCE TO BUILDING. ABOVE GROUND GAS PIPING TO BE SCHEDULE 40 BLACK STEEL (ASTM A53) AND TO BE FULLY WELDED AND ROUTED BELOW ROOF HELD TIGHT TO BOTTOM OF JOISTS.
5. ALL NATURAL GAS PIPING SHALL BE SUPPORTED AND INSTALLED IN ACCORDANCE WITH SMACNA "SEISMIC RESTRAINT MANUAL GUIDELINES FOR MECHANICAL SYSTEMS" FOR SEISMIC HAZARD LEVEL (SHL) "D".
6. ASSURE HVAC EQUIPMENT IS INSTALLED LEVEL (MANUFACTURER'S TOLERANCES) FOR PROPER CONDENSATE DRAINAGE.
7. ASSURE PROPER CLEARANCES FOR SERVICING AND ACCESS TO HVAC EQUIPMENT ARE PROVIDED.
8. SYMBOLS:

   (T) THERMOSTAT

   ——NG—— NATURAL GAS PIPING
9. ALL EQUIPMENT SHALL BE INSTALLED IN ACCORDANCE WITH THE MANUFACTURER'S RECOMMENDATIONS. EQUIPMENT SHALL BE ARRANGED AND FITTED INTO THE AVAILABLE SPACE SO THAT COMPONENTS ARE ACCESSIBLE FOR SERVICE AND REPAIR.

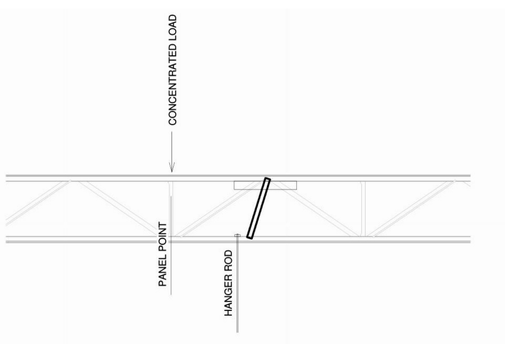

1. FOR PIPING LARGER THAN 3" LOCATE HANGERS WITHIN 3" OF PANEL POINT.
2. WHERE PIPE HANGARS ARE GREATER THAN 3" FROM PANEL POINT, PROVIDE REINFORCEMENT ANGLE PER STRUCTURAL ENGINEER OF RECORD'S DIRECTIONS.

CONCENTRATED LOAD ON JOIST DETAIL

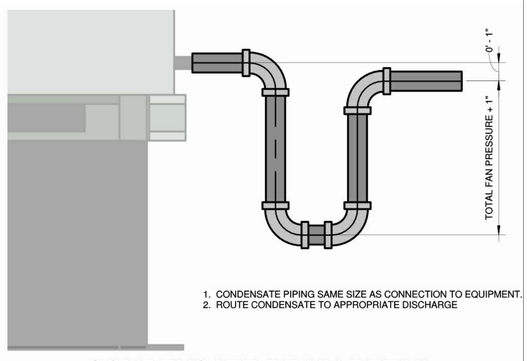

1. CONDENSATE PIPING SAME SIZE AS CONNECTION TO EQUIPMENT.
2. ROUTE CONDENSATE TO APPROPRIATE DISCHARGE

CONDENSATE DRAIN DETAIL

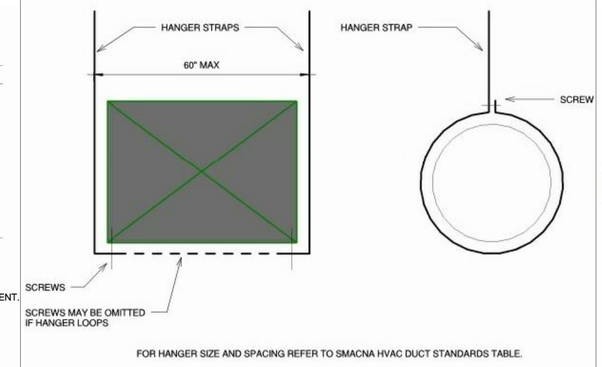

FOR HANGER SIZE AND SPACING REFER TO SMACNA HVAC DUCT STANDARDS TABLE.

DUCT HANGING DETAIL

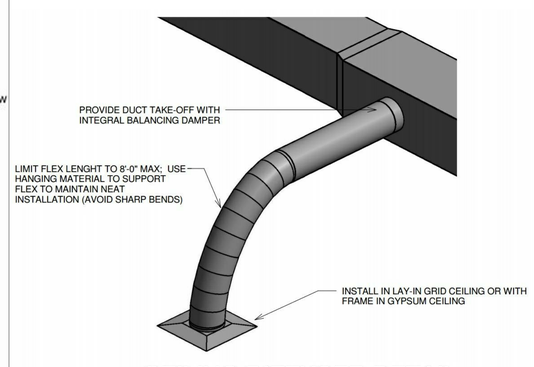

CEILING DIFFUSER DETAIL

STATE OF MICHIGAN
JEFFREY RICE
ENGINEER
NO. 6201060044
LICENSED PROFESSIONAL ENGINEER
05/18/21

TOOLING AND EQUIPMENT INTERNATIONAL
FOUNDRY ADDITION
12550 AND 12560 TECH CENTER DRIVE, LIVONIA, MI

ENGINEERING BY:
GODWIN + ASSOCIATES
architects & engineers
1200 East Woodhurst, D-100 I Springfield I Missouri 65804 I (417) 887-2667 I Fax (417) 887-3215

HOPPE DESIGN, LLC
47032 McBRIDE, BELLEVILLE, MI 48111
734-218-2492

REVISIONS

PROJECT: 2003
DATE: 05/18/21
DRAWN: JAR
CHECKED: JAR

HVAC EQUIPMENT SCHEDULES, NOTES AND DETAILS

M-2

Date: 5/17/2021
Project Number: O-068508
Project Name:
Unit Tag: ERV
Model: EV450JIN--S15-----ANT---L
Qty: 1

Intertek



EV450IN shown

Specifications

Ventilation Type:	Static plate, heat and humidity transfer
Typical Airflow Range:	200-540 CFM
AHRI 1060 Certified Core:	One L85-G5
OA Filters:	Total Qty. 1, MERV 8: 14" x 20" x 2"
RA Filters:	Total Qty. 1, MERV 8: 14" x 20" x 2"
Unit Weight:	137-199 lbs. (varies by option)

Configuration

Unit Tag	ERV
Model	[EV450] EV450
Core Type	[J] G5
Installation Location	[IN] Indoor Unit
Wall	[S] Single (Standard)
Electrical Service	[15] 208-230V / 1 Phase / 60 HZ
EA/FA Fan Motor	[-] Fixed Speed / ODP / PSC - Direct Drive (Standard)
Unit Control	[A] Standard Unit Control Wiring
Disconnect	[N] Non Fused (Standard)
Control Option	[T] Transformer with Isolation Relay (Standard)
Filter Monitor	[-] None
Paint	[-] None
Safety Listing	[L] Listed

Airflow Orientation

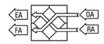

Unit Accessories and Service Parts

No accessories for this unit

AHRI CERTIFIED www.ahridirectory.org
Air-to-Air ERV
AHRI Standard 1060
Energy Recovery CERTIFIED® is certified. Actual performance in packaged equipment may vary.

	SUMMER			WINTER		
	Outdoor Air	**Return Air**	**Fresh Air**	**Outdoor Air**	**Return Air**	**Fresh Air**
Standard Flow Rate **SCFM**	458*	450	450	458*	450	450
Actual Flow Rate **ACFM**	492*	469	473	410*	463	446
Dry Bulb **°F**	90.4	75.0	79.4	2.9	70.0	50.9
Wet Bulb **°F**	73.8	62.4	68.1	1.5	51.3	39.7
Enthalpy (H) **BTU/lb**	37.7	28.4	32.7	1.3	21.1	15.2
Moisture Ratio (MR) **grains/lb**	101.9	66.2	87.2	4.2	27.7	19.1
Fresh Air - External Static Pressure **in w.g.**		0.64			0.64	
Exhaust Air - External Static Pressure **in w.g.**		0.61			0.61	
Sensible effectiveness **%**		71.5			71.5	
Total effectiveness **%**		53.5			69.9	
Load savings ratio **%**		53.5			69.9	
Moisture removed **grains/lb**		14.6			-14.9	
	Sen	**Lat**	**Tot**	**Sen**	**Lat**	**Tot**
Original load **BTUH [Tons]**	7484 [0.6]	11475 [1.0]	18959 [1.6]	32611	7486	40097
Load with RenewAire **BTUH [Tons]**	2134 [0.2]	6689 [0.6]	8823 [0.7]	9299	2785	12084
Total energy saved **BTUH [Tons]**	5350 [0.4]	4786 [0.4]	10136 [0.8]	23311	4702	28013

*Note: OA Flow Rate values are gross airflow, all others are net airflow.
Note: For full certified ERV performance, please see AHRI 1060 Report.
Note: Sensible cooling design conditions were used for the summer performance results.

Fans

	Gross CFM	ESP	Filters	Fan Speed (RPM)	Watts	Elevation	Motors Protected by Motor Starters		Motors Protected by VFDs	
							Qty @ HP	FLA	Qty @ HP	FLA
FA	450	0.64	2" MERV-8	1725	541	663	1@0.6	3.9-3.6	None	-
EA	458	0.61	2" MERV-8	1725						

Unit Electrical Data

Volts	Hertz	Phase	MCA	MOP
208-230	60	1	4.9	15

Fan Curve

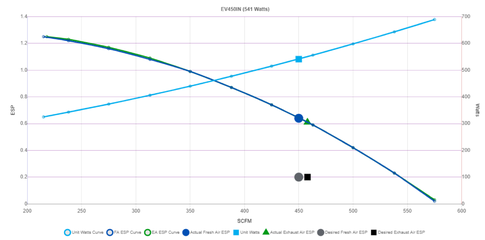

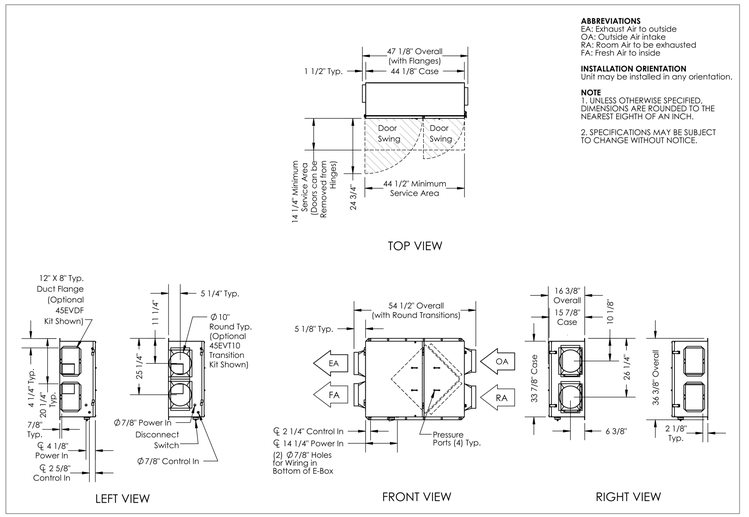

ABBREVIATIONS
EA: Exhaust Air to outside
OA: Outside Air intake
RA: Room Air to be exhausted
FA: Fresh Air to inside

INSTALLATION ORIENTATION
Unit may be installed in any orientation.

NOTE
1. UNLESS OTHERWISE SPECIFIED, DIMENSIONS ARE ROUNDED TO THE NEAREST EIGHTH OF AN INCH.

2. SPECIFICATIONS MAY BE SUBJECT TO CHANGE WITHOUT NOTICE.

Model: EV450IN
Drawing Type: Unit Dimension
Version: MAY17

RenewAire® Energy Recovery Ventilation

TOOLING AND EQUIPMENT INTERNATIONAL FOUNDRY ADDITION

12550 AND 12560 TECH CENTER DRIVE, LIVONIA, MI

ENGINEERING BY:
GODWIN + ASSOCIATES
architects & engineers
1200 East Woodhurst, D-100 | Springfield | Missouri 65804 | (417) 887-2667 | Fax (417) 887-3215

HOPPE DESIGN, LLC
47032 McBRIDE, BELLEVILLE, MI 48111
734-218-2492

REVISIONS

JEFFREY RICE ENGINEER NO. 6201069044 LICENSED PROFESSIONAL ENGINEER STATE OF MICHIGAN 5/18/21

PROJECT: 2003
DATE: 05/18/21
DRAWN: JAR
CHECKED: JAR

ERV DETAIL

M-3

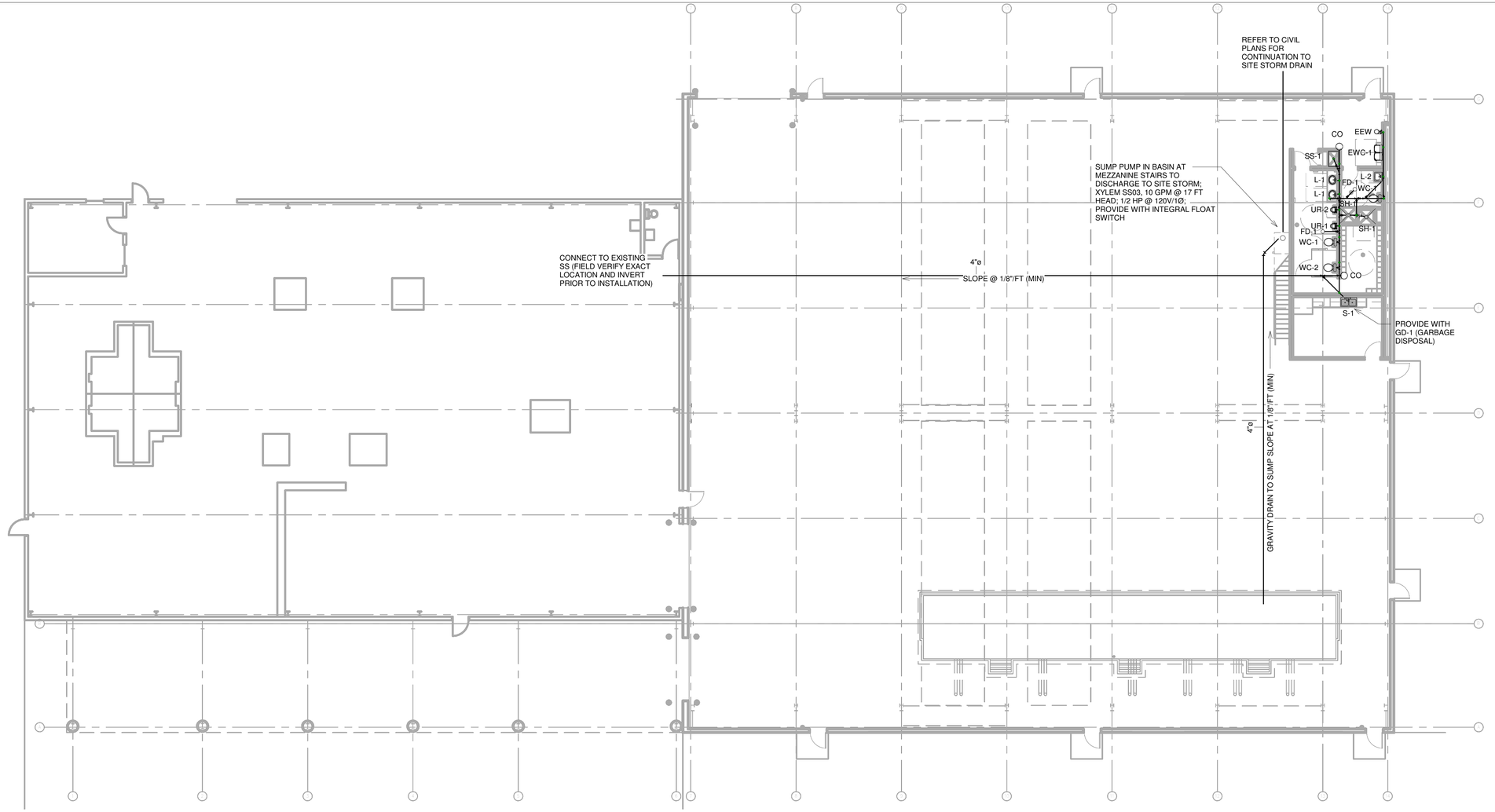

1 FACILITY UNDERFLOOR PLUMBING PLAN
3/32" = 1'-0"

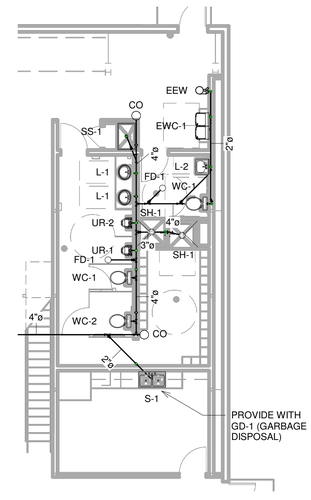

2 ENLARGED UNDERFLOOR PLUMBING PLAN
1/8" = 1'-0"

TOOLING AND EQUIPMENT INTERNATIONAL FOUNDRY ADDITION

12550 AND 12560 TECH CENTER DRIVE, LIVONIA, MI

ENGINEERING BY:
GODWIN + ASSOCIATES
architects & engineers
1200 East Woodhurst, D-100 I Springfield I Missouri 65804 I (417) 887-2867 I Fax (417) 887-3215

HOPPE DESIGN, LLC
47032 McBRIDE, BELLEVILLE, MI 48111
734-218-2492

STATE OF MICHIGAN
JEFFREY RICE
ENGINEER
NO. 6201069944
REGISTERED PROFESSIONAL
05/18/21

REVISIONS

N

PROJECT: 2003
DATE: 05/18/21
DRAWN: JAR
CHECKED: JAR

FACILITY UNDERFLOOR PLUMBING PLAN

P-1

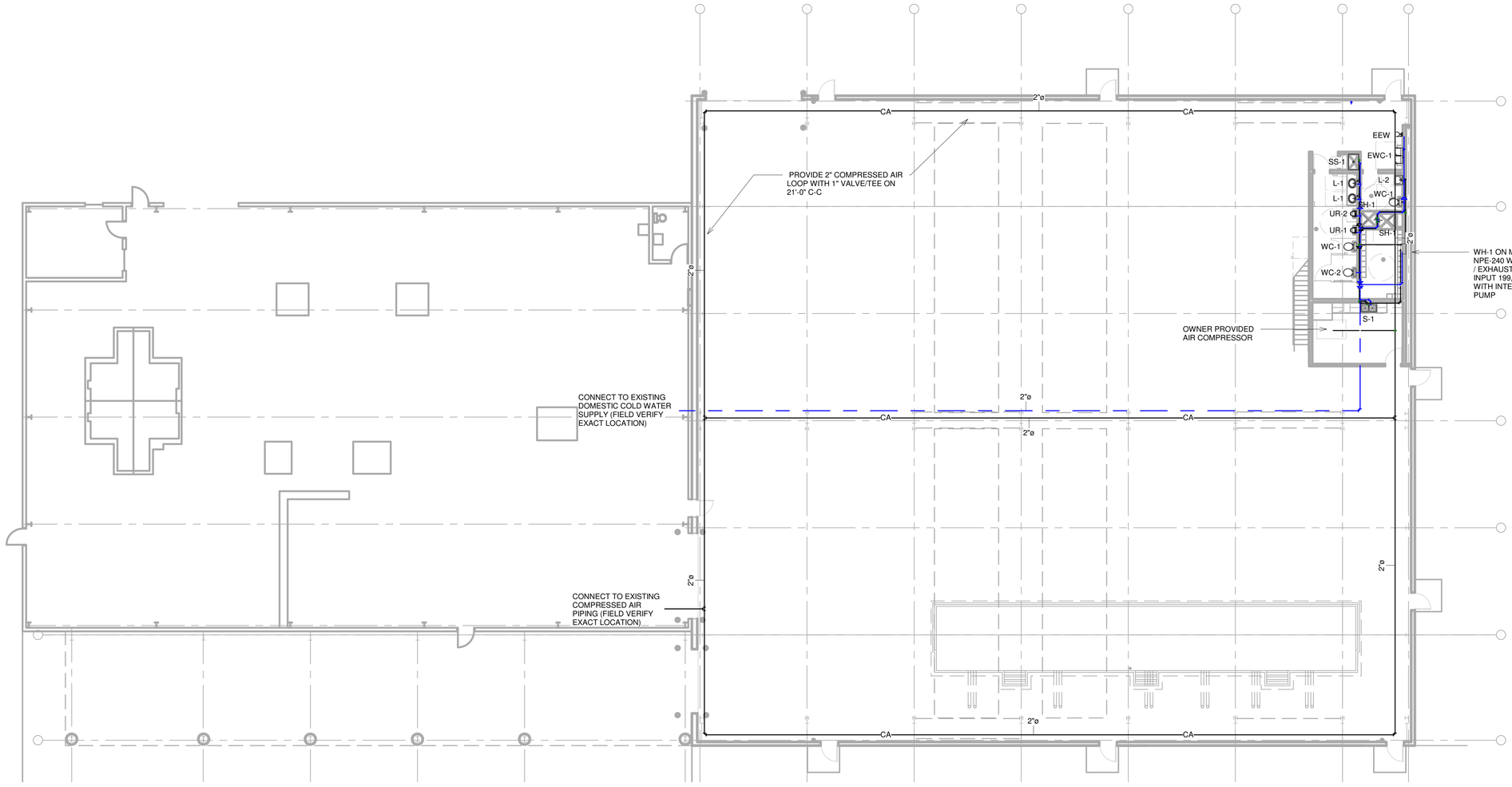

1 FACILITY OVERHEAD PLUMBING PLAN
3/32" = 1'-0"

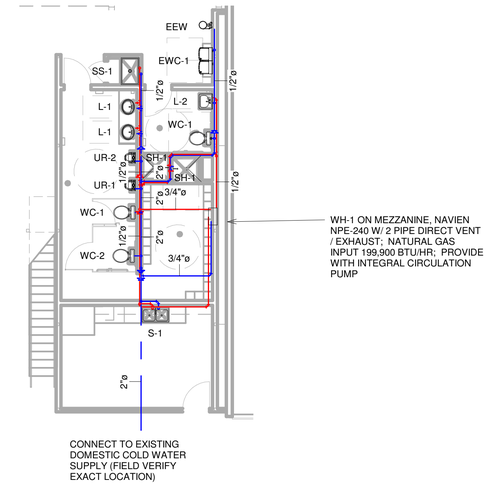

2 ENLARGED OVERHEAD PLUMBING PLAN
1/8" = 1'-0"

TOOLING AND EQUIPMENT INTERNATIONAL
FOUNDRY ADDITION
12550 AND 12560 TECH CENTER DRIVE, LIVONIA, MI

ENGINEERING BY:
GODWIN + ASSOCIATES
architects & engineers
1200 East Woodhurst, D-100 | Springfield | Missouri 65804 | (417) 887-2667 | Fax (417) 887-3215

HOPPE DESIGN, LLC
47032 McBRIDE, BELLEVILLE, MI 48111
734-218-2492

REVISIONS

JEFFREY RICE ENGINEER NO. 6201069044 REGISTERED PROFESSIONAL ENGINEER
05/18/21

PROJECT: 2003
DATE: 05/18/21
DRAWN: JAR
CHECKED: JAR

FACILITY OVERHEAD PLUMBING PLANS

P-2

FD-1, FLOOR DRAIN (FINISH FLOOR)	ZURN ZB415-B OR EQUAL BY WADE OR SMITH, CAST IRON DRAIN WITH FLANGE AND WEEP HOLES, CAULKED BOTTOM OUTLET, ROUND TOP IRON ADJUSTABLE COLLAR WITH ROLL THREAD, TYPE B, POLISHED BRONZE STRAINER.
WC-1, WATER CLOSET	FLOOR-MOUNTED, VITREOUS CHINA, SIPHON JET ACTION, CLOSE-COUPLED TANK TYPE WITH ELONGATED BOWL. WATER CLOSET SHALL BE AMERICAN STANDARD 2462.016 "CADET ELONGATED", ZURN Z5552, LOW CONSUMPTION (1.6 GALLONS/FLUSH) OR EQUAL BY KOHLER OR ELJER. WATER CLOSET SHALL BE COMPLETE WITH SOLID PLASTIC, EXTRA HEAVY, OPEN FRONT SEAT WITH STAINLESS STEEL HINGE POSTS AND CONCEALED CHECK; AMERICAN STANDARD 5320.114, ZURN Z5955SS-EL, OR EQUAL, WHITE COLOR.
WC-2, WATER CLOSET	SAME AS "WC-1" EXCEPT AMERICAN STANDARD 2467.016 "CADET RIGHT HEIGHT", ZURN Z551, OR EQUAL WHICH IS ACCESSIBLE HEIGHT.
UR-1, URINAL	WALL-MOUNTED, VITREOUS CHINA, SIPHON JET, WATER LOW CONSUMPTION (0.125 GALLONS/FLUSH), 3/4" INLET SPUD, 2" OUTLET, KOHLER K-4991-ET "BARDON SUPERIOR", 14" MINIMUM WALL TO LIP DIMENSION COMPLYING WITH ANSI A112. ZURN ZER6003 OR EQUAL, BATTERY OPERATED, WITH SOLID STATE ELECTRONIC CIRCUITRY, 3 YEAR BATTERY LIFE AT 4000 FLUSHES/MONTH.
UR-2, URINAL	SAME AS "UR-1" EXCEPT MOUNTED WITH RIM 17" ABOVE FLOOR FOR ACCESSIBLE USE.
L-1, LAVATORY	22-3/4" X 18" SIZE, VITREOUS CHINA, DROP-IN BATHROOM SINK, KOHLER, "MEMOIRS STATELY K-2337-4, OR EQUAL. EACH LAVATORY SHALL BE EQUIPPED WITH ZURN Z6915-XL OR EQUAL, BATTERY OPERATED WITH SOLID STATE ELECTRONIC CIRCUITRY, 2 YEAR BATTERY LIFE AT 8000 CYCLES/MONTH, 0.5 VANDAL RESISTANT AERATOR, THERMOSTATIC MIXING VALVE. SUPPLY PIPE ASSEMBLY SHALL BE AMERICAN STANDARD OR EQUAL, 2303.154, CONSISTING OF 1/2" WHEEL HANDLE ANGLE VALVE, 1/2" MALE THREAD INLET ESCUTCHEON AND 1/2" X 12-3/4" FLEXIBLE TUBE RISER. ASSEMBLY SHALL BE FURNISHED WITH A CHROME FINISH. LAVATORY TRAP SHALL BE AMERICAN STANDARD 4418.026 OR EQUAL, CHROME PLATED "P" TRAP WITH CLEANOUT PLUG.
L-2, LAVATORY	21-1/4" X 18-1/4" SIZE, VITREOUS CHINA, WALL-MOUNTED LAVATORY, KOHLER K-2005, OR EQUAL. EACH LAVATORY SHALL BE EQUIPPED WITH SAME FAUCET AND SUPPLY PIPE ASSEMBLY AS L-1.
SS-1, SERVICE SINK	FIAT MSB OR EQUAL, MOLDED STONE, FLOOR-MOUNTED, 36" X 24" X 10" HIGH, COMPLETE WITH FIAT 830AA DUAL CONTROL FAUCET WITH EXPOSED VACUUM BREAKER ASSEMBLY, BUCKET HOOK, AND ¾" HOSE OUTLET; 1453-BB FLAT TYPE STAINLESS STEEL STRAINER AND DRAIN.
S-1, SINK	ELKAY "LUSTERTONE" LR-3319, OR EQUAL, DOUBLE COMPARTMENT, 18 GA. STAINLESS STEEL, SELF-RIMMING SINK WITH LEDGE BACK. SINK SHALL BE 33" LONG X 19-1/2" WIDE X 7-5/8" DEEP WITH EACH BOWL MEASURING 14" LONG X 14" WIDE. SINK SHALL BE FITTED WITH FAUCET HOLES AS REQUIRED FOR THE SPECIFIED FAUCET. SINK SHALL BE FITTED WITH AMERICAN STANDARD Z831C4-XK, WIDESPREAD GOOSENECK FAUCET, OR EQUAL. SINK SHALL BE FURTHER FITTED WITH AMERICAN STANDARD OR EQUAL, 4331.013 CRUMB CUP STRAINER OF ALL-BRASS CONSTRUCTION WITH A RUBBER STOPPER, 3-1/2" OUTLET AND 1-1/2" X 4", 20 GA. TAILPIECE WITH BRASS LOCKNUT AND COUPLING NUT. TRIM SHALL BE FURNISHED WITH A CHROME FINISH. SUPPLY PIPE ASSEMBLY SHALL BE AMERICAN STANDARD 2303.154, OR EQUAL, CONSISTING OF 3/8" WHEEL HANDLE ANGLE VALVE, 3/8" MALE THREAD OUTLET, ESCUTCHEON AND 3/8" X 12-3/4" FLEXIBLE TUBE RISER. ASSEMBLY SHALL BE FURNISHED WITH A CHROME FINISH.
WH-1, WATER HEATER	INSTANTANEOUS WATER HEATER, NAVIEN NPE-240 W/ 2 PIPE DIRECT VENT / EXHAUST; NATURAL GAS INPUT 199,900 BTU/HR; PROVIDE WITH INTEGRAL CIRCULATION PUMP
TRAP PRIMER	PROSET TRAP GUARD, OR EQUAL, ELASTOMERIC, NORMALLY CLOSED TRAP GUARD DEVICE PROVIDED AT ALL FLOOR DRAINS. DEVICE HAS A NORMALLY CLOSED SEAL TO PREVENT EVAPORATION OF THE TRAP SEAL AND ALSO PROTECT AGAINST SEWER GASES FROM BACKING UP INTO HABITABLE AREAS. IT OPENS WITH FLUID AND ALLOWS LIQUID DRAINAGE TO FLOW THROUGH INTO THE BUILDING DRAIN. PROVIDE AT EACH FLOOR DRAIN.
GD-1, GARBAGE DISPOSAL	INSINKERATOR "EVOLUTION EXCEL," OR EQUAL, GARBAGE DISPOSAL, WITH 40 OZ CHAMBER CAPACITY, STAINLESS STEEL FINISH, 1.0 HP, 115V SINGLE PHASE; WALL SWITCH, UL LISTED, PERMANENTLY LUBRICATED UPPER AND LOWER BEARINGS AND MOTOR OVERLOAD PROTECTION. 7 YEAR SERVICE WARRANTY.
EEW (EMERGENCY EYEWASH)	GUARDIAN, MODEL G1814P, OR EQUAL UNIT, CSA/SEI CERTIFIED TO ANSI Z358 "STANDARD FOR EMERGENCY EYEWASH AND SHOWER EQUIPMENT". WALL MOUNTED, EYEWASH WITH ABS PLASTIC BOWL, ½" U.S. MADE CHROME-PLATED BRASS STAY-OPEN BALL VALVE, POWDER-COATED CAST ALUMINUM FLAG HANDLE AND WALL BRACKET. UNIT SHALL HAVE (2) POLYPROPYLENE GS-PLUS™ SPRAY HEADS WITH INTEGRAL "FLIP-TOP" DUST COVERS, FILTERS AND 1.6 GPM FLOW CONTROL ORIFICES MOUNTED ON A CHROME-PLATED BRASS EYEWASH ASSEMBLY. UNIT SHALL INCLUDE ANSI COMPLIANT SIGN.

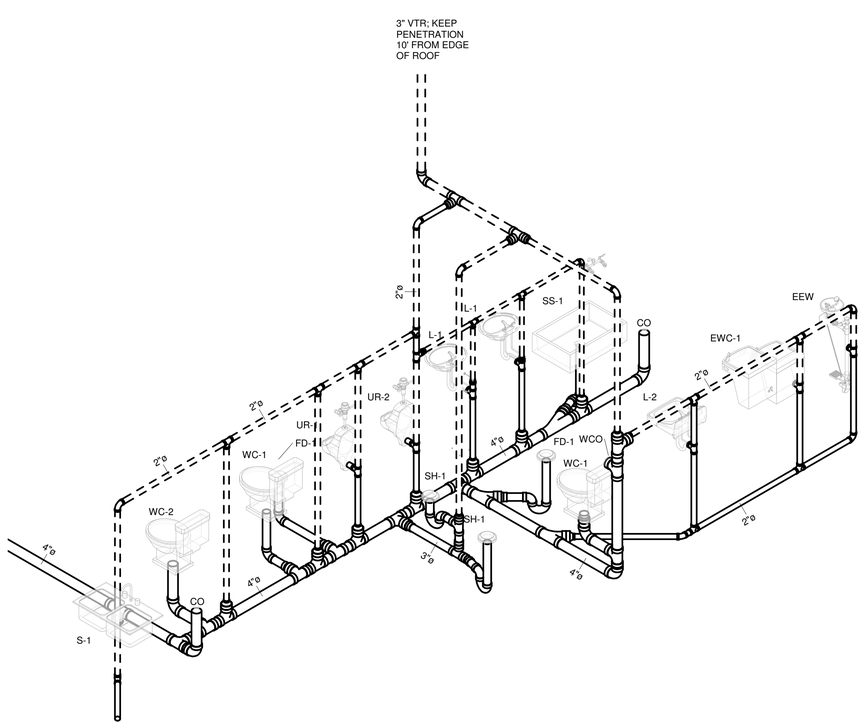

1 ENLARGED AREA RR SANITARY PLUMBING RISER

FIXTURE CONNECTION SCHEDULE

(NOTE: CONNECTIONS ARE TYPICAL UNLESS NOTED OTHERWISE ON DWG.)

FIXTURE		COLD WATER	HOT WATER	DRAIN	VENT
WC	WATER CLOSET	1"	----	4"	2"
UR	URINAL	3/4"	----	2"	1 1/2"
L	LAVATORY	1/2"	1/2"	2"	1 1/2"
S	SINK	1/2"	1/2"	2"	1 1/2"
EWC	ELEC WATER COOLER	1/2"	----	2"	1 1/2"
CO	CLEANOUT	----	----	4"	----
FD	FLOOR DRAIN	----	----	4"	----
WH	WATER HEATER	3/4"	3/4"	----	----
SS	SERVICE SINK	1/2"	1/2"	3"	1 1/2"

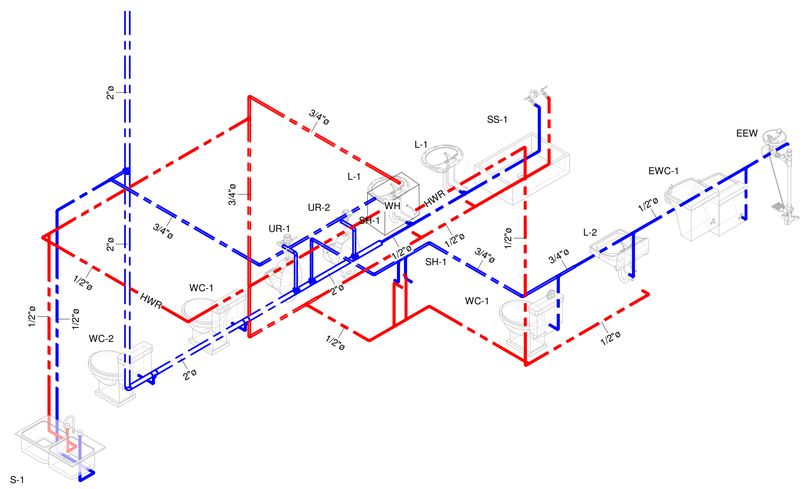

2 ENLARGED AREA RR DOMESTIC PLUMBING RISER

PLUMBING NOTES:

1. WORKMANSHIP SHALL COMPLY WITH CALIFORNIA PLUMBING CODE AND ALL OTHER LOCAL CODES AND ORDINANCES.

2. UNDERGROUND SANITARY SEWER SHALL BE PVC PIPE (ASTM D2665).

3. ALL FLOOR DRAINS TO BE PROVIDED WITH DEEP SEAL TRAPS WITH TRAP SEAL.

4. PROVIDE CLEAN-OUTS AT CHANGE IN DIRECTION AND EVERY 50' IN HORIZONTAL RUNS FOR 4" AND SMALLER DIAMETERS.

5. COPPER TYPE "L" (ASTM B88) OR GALVANIZED STEEL SCHEDULE 40 (ASTM A53) PIPING FOR OVERHEAD WATER DISTRIBUTION. PIPING 2.5" OR LARGER SCH 80 PVC AT CONTRACTOR OPTION.

6. INSTALL WATER HAMMER ARRESTORS AT END OF PIPE RUNS OR AS SHOWN ON DRAWINGS. ARRESTOR SHOULD BE ABOVE CEILING FOR EASY ACCESSES FOR SERVICING.

7. INSULATE DOMESTIC WATER LINES WITH FIBERGLASS WITH ASJ JACKET- COLD WATER 1/2" THICK AND HOT WATER 1" THICK.

8. PROVIDE ACCESSIBLE STOPS IN PIPING CONNECTIONS TO ALL PLUMBING FIXTURES. PROVIDE SHUTOFF VALVES TO WATER LINES SERVING OFFICES AND FACILITY RESTROOM AS INDICATED ON PLANS.

9. HOLD EXPOSED VERTICAL PIPING TIGHT TO WALLS AND COLUMNS. PROVIDE OFFSETS AROUND STRUCTURAL MEMBERS WHERE REQUIRED.

10. PROVIDE ACCESSIBLE LAVATORY GUARD KIT: TRUEBRO, INC. "HANDI LAV-GUARD MODEL" 101 OR EQUAL, WHITE MOLDED CLOSED CELL VINYL INSULATION, NYLON FASTENERS FOR INSTALLATION ON P-TRAP AND HOT WATER VALVE/SUPPLY TUBE IF PIPING IS EXPOSED TO USER.

11. VALVES: VALVES SHALL BE PROVIDED AT ALL POINTS OF EQUIPMENT CONNECTION AND FOR THE CONTROL OF MAJOR BRANCH LINES OR AS INDICATED ON PLANS. BALL VALVES, 600# CLASS, BRONZE CONSTRUCTION, TEFLON SEATS. VALVES SHALL BE MILWAUKEE BA150, OR EQUAL, WITH SOCKET JOINT OR MILWAUKEE BA-100, OR EQUAL, WITH THREADED ENDS.

12. WATER LINES SHALL BE RUN LEVEL, AT ELEVATIONS REQUIRED TO AVOID INTERFERENCES WITH OTHER SERVICES AND AS FURTHER REQUIRED TO PRESERVE MAXIMUM HEADROOM.

13. VENT PIPING SHALL BE GRADED SO AS TO DRAIN BACK TO SOIL OR WASTE PIPE.

14. FLOOR DRAINS SHALL BE SET RECESSED WITH FLOOR AND SHALL BE FLASHED AS REQUIRED.

15. DISINFECTION OF POTABLE WATER SYSTEM: AFTER THE WATER PIPING SYSTEM HAS BEEN COMPLETED, TESTED AND APPROVED, CONTRACTOR SHALL STERILIZE THE ENTIRE WATER SYSTEM. SYSTEM SHALL BE DRAINED AND REFILLED WITH A SOLUTION CONTAINING 50 GPM OF AVAILABLE CHLORINE AN ALLOWED TO STAND 6 HOURS BEFORE FLUSHING AND RETURNING TO SERVICE. ALLOWING STERILIZATION, SYSTEM SHALL BE THOROUGHLY FLUSHED THROUGH ALL FIXTURES AND OUTLETS TO REMOVE ALL TRACES OF THE STERILIZING SOLUTION. AWWA © 651 "DISINFECTION OF WATER MAINS" MAY BE FOLLOWED AS AN ALTERNATE TO THIS PROCEDURE.

16. CONTRACTOR SHALL CONDUCT TESTING OF ALL EQUIPMENT AND PIPING SYSTEMS FURNISHED AND INSTALLED. ALL EQUIPMENT REQUIRED FOR THE TESTING SHALL BE FURNISHED BY THE CONTRACTOR. ALL TESTS SHALL BE CONDUCTED IN THE PRESENCE OF THE ENGINEER OR OWNER.

17, ALL TESTS SHALL BE CONDUCTED AT SUCH PLACES AND TIMES TO PERMIT ALL WORK TO PROCEED WITH AS LITTLE INTERRUPTION AS POSSIBLE. TESTS SHALL BE MADE BEFORE ANY OF THE WORK IS COVERED OR CONCEALED.

18. ALL SANITARY AND STORM SEWER PIPE SHALL BE TESTED FOR LEAKS. PIPES AND VENT LINES SHALL BE CAPPED OR PLUGGED AND LINES SHALL BE FILLED WITH WATER TO THE TOP OF VENTS ABOVE THE ROOF AND ALLOWED TO STAND UNTIL A THOROUGH INSPECTION HAS BEEN MADE. DETECTED LEAKS SHALL BE REPAIRED AND THE SYSTEM RETESTED. WHEN TESTING THE SYSTEM BY SECTIONS, THE MINIMUM HEIGHT OF THE WATER COLUMN SHALL BE 10', NO ROSIN, GLASS FILLERS, CEMENT, CANDLE WAX OR ANY OTHER SUBSTANCE SHALL BE USED FOR STOPPING LEAKS IN CAST IRON.

19. HOT AND COLD WATER PIPING SHALL BE TESTED UNDER A COMPRESSED AIR PRESSURE OF 140 PSI FOR A PERIOD OF 2 HOURS. DETECTED LEAKS SHALL BE REPAIRED AND THE TEST REPEATED UNTIL THE SYSTEM IS FREE OF LEAKS.

20. ALL PLUMBING FIXTURES SHALL BE INSTALLED IN ACCORDANCE WITH MANUFACTURER'S RECOMMENDATIONS AND ROUGH-IN DRAWINGS.

21. PLUMBING FIXTURES SHALL BE BEADED AND CAULKED ALONG JOINTS AT WALLS, COUNTERTOPS AND OTHER INTERSECTING SURFACES UTILIZING APPROVED CAULKING COMPOUNDS.

22. INSULATE HOT WATER AND DRAIN PIPE UNDER ACCESSIBLE LAVATORIES WITH INSULATION GUARD KIT.

23. INSTALL PROTECTIVE ENCLOSURE ON ACCESSIBLE CABINET MOUNTED SINKS.

24. PROVIDE STOPS ON WATER SUPPLIES TO ALL PLUMBING FIXTURES.

25. CLEAN REST ROOM FIXTURES.

TOOLING AND EQUIPMENT INTERNATIONAL FOUNDRY ADDITION

12550 AND 12560 TECH CENTER DRIVE, LIVONIA, MI

ENGINEERING BY:
GODWIN + ASSOCIATES
architects & engineers
1200 East Woodhurst, D-100 I Springfield I Missouri 65804 I (417) 887-2667 I Fax (417) 887-3215

HOPPE DESIGN, LLC
47032 McBRIDE, BELLEVILLE, MI 48111
734-218-2492

REVISIONS

STATE OF MICHIGAN
JEFFREY RICE
ENGINEER
NO. 6201069044
REGISTERED PROFESSIONAL ENGINEER

PROJECT: 2003
DATE: 05/18/21
DRAWN: JAR
CHECKED: JAR

ENLARGED AREA RISER PLANS

P-3

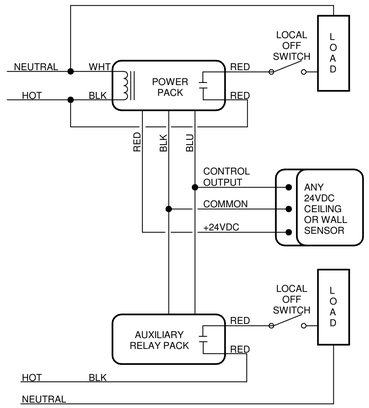

EXHAUST FAN/LIGHTING TWO CIRCUIT CONTROL

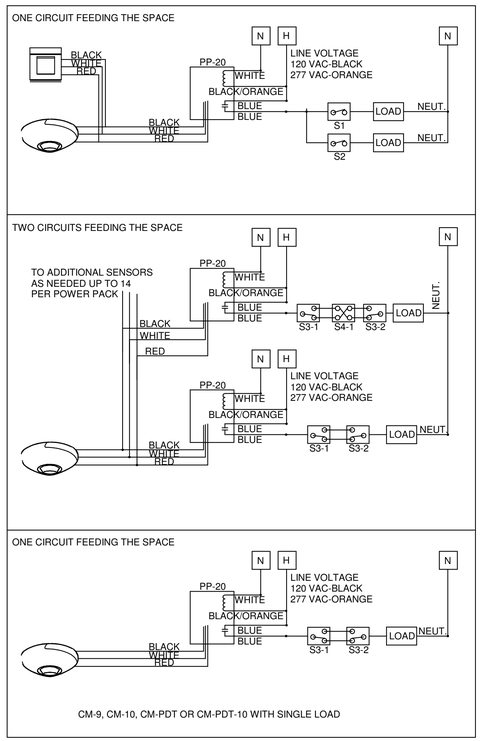

MOTION SENSOR LIGHTING CONTROL DIAGRAMS

ELECTRICAL SPECIFICATIONS

ELECTRICAL SYSTEMS SHALL BE IN COMPLETE AND WORKING ORDER.

CODES, PERMITS, AND FEES: OBTAIN PERMITS, PAY FEES, AND SECURE INSPECTIONS REQUIRED BY AGENCIES HAVING AUTHORITY OVER THIS WORK.

PROVIDE SUBMITTALS FOR LIGHT FIXTURES, PANELBOARDS, AND FIRE ALARM SYSTEM IN ACCORDANCE WITH PROCEDURE DESCRIBED IN DIVISION 1

ELECTRICAL WORK SHALL BE INSTALLED IN ACCORDANCE WITH THE DRAWINGS AND SPECIFICATIONS, WITH THE LATEST EDITION OF THE NATIONAL ELECTRICAL CODE, WITH STATE AND LOCAL ELECTRICAL AND BUILDING CODES AND ORDINANCES, AND WITH SPECIAL CODES HAVING JURISDICTION OVER SPECIFIC PORTIONS WITHIN THE COMPLETE INSTALLATION.

PERFORM TESTING IN PRESENCE OF OWNER'S REPRESENTATIVE.

IDENTIFY ELECTRICAL EQUIPMENT WITH PERMANENTLY PLASTIC ENGRAVED ATTACHED LABELS.

AT TERMINATION OF WORK UNDER THIS DIVISION, FURNISH OWNER THREE COMPLETE BOUND SETS OF OPERATING INSTRUCTIONS ON EQUIPMENT FURNISHED UNDER THIS DIVISION.

MAKE ELECTRICAL CONNECTIONS TO MECHANICAL EQUIPMENT AND CONTROLS. DETERMINE REQUIREMENTS FROM DRAWINGS, SPECIFICATIONS, AND SHOP DRAWINGS.

MAINTAIN ONE SET OF ELECTRICAL PRINTS ON THE SITE, MARKED TO SHOW AS-BUILT CONDITIONS AND INSTALLATIONS. PREPARE COPIES OF THESE PRINTS AT JOB COMPLETION.

PROVIDE JUNCTION BOXES AS SHOWN ON DRAWINGS AND OTHERWISE WHERE REQUIRED, SIZED ACCORDING TO NUMBER OF CONDUCTORS IN BOX OR TYPE OF SERVICE TO BE PROVIDED.

INSTALL FEEDER WIRING IN CONDUIT. COMPLY WITH NATIONAL ELECTRICAL CODE AND LOCAL AUTHORITIES HAVING JURISDICTION, INCLUDING GROUNDING AND SUPPORTING ARRANGEMENT.

WIRING: WIRE AND CABLE SHALL BE TYPE THHN OR THW, 600V. WIRING SHALL BE MINIMUM #12 AWG. #12 AND #10 AWG CONDUCTORS SHALL BE SOLID WITH THWN OR THHN INSULATION. #8 AWG AND LARGER, STRANDED THW, THWN, OR THHN. COLOR CODE CONDUCTORS AS FOLLOWS:

120/208 VOLT	**277/480 VOLT**
PHASE A - BLACK	PHASE A - BROWN
PHASE B - RED	PHASE B - ORANGE
PHASE C - BLUE	PHASE C - YELLOW
NEUTRAL - WHITE	NEUTRAL - GRAY
GROUND - GREEN	GROUND - GREEN + YELLOW STRIPE

GROUNDING: PROVIDE ALL CABLES WITH GROUND CONDUCTORS. GROUND ELECTRICAL SYSTEM IN ACCORDANCE WITH ARTICLE 250, NATIONAL ELECTRICAL CODE AND LOCAL AUTHORITIES HAVING JURISDICTION. DO NOT USE FLEXIBLE METAL CONDUIT AND FITTINGS AS A GROUNDING MEANS. PULL A GREEN WIRE IN OR AROUND EACH PIECE OF FLEXIBLE CONDUIT AND SCREW TO CONDUIT SYSTEM WITH LUGS AT BOTH ENDS.

RACEWAYS: PROVIDE COMPLETE CONDUIT SYSTEM WITH ASSOCIATED COUPLINGS, CONNECTORS, AND FITTINGS.

USE FLEXIBLE METAL CONDUIT AT THE TERMINATION OF LIGHT FIXTURES OR OF EQUIPMENT SUBJECT TO MECHANICAL VIBRATION. FLEXIBLE METAL CONDUIT SHALL BE ELECTRICALLY CONTINUOUS FROM OUTLET OR CONDUIT END TO UTILIZATION EQUIPMENT. LENGTH SHALL NOT EXCEED 6 FEET EXPOSED OR 3 FEET CONCEALED IN WALLS. A COPPER GROUND WIRE SHALL BE INSTALLED AS A JUMPER AROUND FLEXIBLE CONDUIT. THE JUMPER MAY BE INSTALLED INSIDE OR OUTSIDE OF CONDUIT TO ASSURE CONTINUITY OF GROUND.

USE PVC CONDUIT FOR OUTSIDE UNDERGROUND BRANCH CIRCUITS, FOR ELECTRICAL SERVICE, AND FOR TELEPHONE SERVICE. USE IMC OR RGS ELLS WHEN TURNING UP ABOVE GROUND OR THROUGH CONCRETE SLAB. PVC CONDUIT SHALL BE CARLON, SCHEDULE 40.

FLEXIBLE WIRING SYSTEMS MAY BE EMPLOYED WITH APPROPRIATE FITTINGS, TERMINATIONS, BONDING, GROUNDING AND SUPPORTS AS ALLOWED BY CODE AND RECOMMENDED BY MANUFACTURER.
RUN EXPOSED CONDUIT AT RIGHT ANGLES TO OR PARALLEL TO WALLS OF BUILDING.

SUPPORT CONDUIT VERTICALLY AND HORIZONTALLY BY STRAPS OR HANGERS.

USE EXPANSION FITTINGS, PROPERLY BONDED TO ASSURE GROUND CONTINUITY ACROSS EXPANSION JOINTS IN FLOORS AND CEILINGS. USE SHORT PIECES, APPROXIMATELY TWO FEET OF FLEXIBLE CONDUITS, TO CONNECT MOTORS AND OTHER DEVICES SUBJECT TO MOTION AND VIBRATION.

IMC AND EMT CONDUIT SHALL BE HOT DIPPED, GALVANIZED, OR ELECTROGALVANIZED STEEL BY ALLIED, GENERAL ELECTRIC, REPUBLIC, TRIANGLE,
OR WHEATLAND.

OUTLET BOXES: PROVIDE WIRING DEVICES, FIXTURES, AND SPECIAL OUTLETS WITH AN OUTLET BOX.

FLOOR BOXES SHALL BE FLUSH IN FLOOR, WITH COVER, MULTIGANG AS REQUIRED FOR THE SPECIFIC USE OF BOX.

WIRING DEVICES:
SINGLE POLE SWITCH - 15A, 120/277VAC: 1201-I
DUPLEX RECEPTACLE - 15A, 125VAC: 5252-I
GROUND FAULT INTERRUPTING RECEPTACLE - 15A, 125VAC: 6599LI

DEVICE PLATES: PROVIDE DEVICE PLATES ON SWITCHES, RECEPTACLES, TELEPHONE OUTLETS, AND MISCELLANEOUS DEVICES

PANELBOARDS: PROVIDE PANELBOARDS AS DESCRIBED IN PANEL SCHEDULES ON DRAWINGS.

SYMBOL SCHEDULE

SYMBOL	DESCRIPTION
	MOTOR CONNECTION (NUMBER IN CENTER INDICATES HORSEPOWER)
	DUPLEX 20A 125V RECEPTACLE. INSTALL @ 1'-6" A.F.F. IN FINISHED AREAS AND @ 4'-0" IN UNFINISHED AREAS.
SC	DUPLEX 20A 125V RECEPTACLE. INSTALL @ ROOF DECKING FOR SECURITY CAMERA
	QUAD (2-DUPLEXES UNDER 1 COVER) 20A 125V RECEPTACLE. INSTALL @ 1'-6" A.F.F. IN FINISHED AREAS.
	EMPTY 2" X 4" J-BOX W 1" CONDUIT STUBBED INTO CEILING SPACE OR BAR JOIST AREA. INSTALL @ 1'-6" ABOVE PLATFORM.
	TELEPHONE OUTLET W 3/4" CONDUIT STUBBED INTO CEILING SPACE. INSTALL @ 1'-6" A.F.F.
	TELEPHONE/DATA OUTLET W 3/4" CONDUIT STUB INTO CEILING SPACE OR BAR JOIST AREA. INSTALL @ 1'-6" A.F.F.
$	SPST 20A 125 OR 277V WALL SWITCH. INSTALL @ 4'-0" A.F.F.
$3	20A 125 OR 277V 3 WAY WALL SWITCH. INSTALL @ 4'-0" A.F.F.
$4	20A 125 OR 277V 4WAY WALL SWITCH. INSTALL @ 4'-0" A.F.F.
$MS	20A 120V MANUAL MOTOR STARTER.
	ENCLOSED 30A 3PST 600 VOLT SWITCH W/ LOCKOUT DEVICE
	REMOTE PUSH BUTTON CONTROL STATION WITH PILOT LIGHT.
	SAFETY DISCONNECT SWITCH. NF (NON-FUSED)
T	THERMOSTAT. INSTALL @ 5'-0" A.F.F. INSTALL ABOVE WALL SWITCH WHERE POSSIBLE.
J OR J	JUNCTION OR PULLBOX. SIZE AS REQUIRED.
P	PHOTO ELECTRIC CELL LIGHTING CONTROL MOUNTED ON ROOF.
T	DRY TYPE TRANSFORMER 1Ø OR 3Ø. SIZE AS NOTED ON THE PLANS.
	'L' PANEL. 120/208V. 3Ø, 4W LOW VOLTAGE LIGHTING AND POWER DISTRIBUTION PANEL.
	'H' PANEL 277/480V. 3Ø, 4W LIGHTING AND POWER DISTRIBUTION PANEL.
	RACEWAY WITH CONDUCTORS RUN CONCEALED IN FLOOR SLAB, IN WALLS OR IN EARTH.
	RACEWAY WITH CONDUCTORS RUN EXPOSED. RUN PARALLEL AND AT RIGHT ANGLES TO BUILDING STRUCTURE.
	RACEWAY FOR TELEPHONE CABLES INSTALLED BY TELEPHONE COMPANY.
	RACEWAY WITH CONDUCTORS RUN CONCEALED ABOVE CEILING, IN WALLS OR IN FURRED SPACES.
	INSULATED GREEN GROUND CONDUCTOR. SAME SIZE AS PHASE WIRE UNLESS NOTED.
	3/4"Ø x 10'-0" GROUND ROD WITH #3/0 JUMPER
A.F.F.	ABOVE FINISHED FLOOR
A.F.G.	ABOVE FINISHED GRADE
W.P.	WEATHER PROOF
E.F.	EXHAUST FAN
F.L.A.	FULL LOAD AMPS
R.T.U.	ROOF TOP HEATING AND AIR CONDITIONING UNIT
C.U.	CONDENSING UNIT
F.A.C.P.	FIRE ALARM CONTROL PANEL
U.H.	UNIT HEATER (GAS FIRED UNLESS NOTED)
E.U.H.	ELECTRIC UNIT HEATER
W.H.	WATER HEATER
G.F.I.	GROUND FAULT INTERRUPT
E.W.C.	ELECTRIC WATER COOLER
F.C.P.S	FIRE ALARM SYSTEM HORN/STROBE POWER SUPPLY
S.C.	SECURITY CAMERA
I.G.	INDEPENDENT GROUND
O.C.A.F.F.	ON CENTER ABOVE FINISH FLOOR

NOTES: THIS IS A STANDARD SYMBOLS SCHEDULE. ALL SYMBOLS SHOWN ON THIS SCHEDULE MAY NOT APPEAR IN THIS SET OF DRAWINGS.

LUMINAIRE SCHEDULE

TYPE MARK	LAMPS	VOLTAGE	MOUNTING	FINISH	SPECIFICATIONS
A	181.6W LED @ 24,000 LUMENS	277 V	SEE DETAIL THIS SHEET	BLACK	LED HIGHBAY HIGH AMBIENT FIXTURE AND ELECTRONIC DRIVER. (LITHONIA #JEBL24000LMGLMVOLT50K80CRIDBLXD OR EQUAL) PROVIDE FIXTURE WITH A FACTORY MOUNTED MOTION SENSOR LEGRANDE #FSP-201.
B	29W LED @ 3,877 LUMENS	277 V	RECESSED CEILING	WHITE ENAMEL	LED RECESSED TROFFER FLAT PANEL FIXTURE WITH ELECTRONIC DRIVER. (HUBBELL #CBT24-LS40 OR EQUAL)
C	20W LED @ 2,862 LUMENS	277 V	SURFACE CEILING	WHITE ENAMEL	4'-0" LED SURFACE MOUNT WRAPAROUND FIXTURE W/ DIFFUSE ACRYLIC LENS, AND ELECTRONIC DRIVER. (HE WILLIAMS #SLF-4-L52/840-H1A-OCCSS-SBR-10-277-DRV-UNV OR EQUAL)
D	8.7W LED @ 1,100 LUMENS	277 V	RECESSED CEILING	WHITE	6" LED RECESSED DOWNLIGHT WITH CLEAR SEMI-SPECULAR OPEN REFLECTOR (HE WILLIAMS #6DR-TL-L10/840-DIM-UNV-SW-OF-CS-WET/CC-N-F1 OR EQUAL)
E	20W LED @ 2,780 LUMENS	277 V	SURFACE CEILING	WHITE ENAMEL	2' -0" LED SURFACE MOUNT WRAPAROUND FIXTURE W/ DIFFUSE ACRYLIC LENS, AND ELECTRONIC DRIVER. (HE WILLIAMS #SLF-2-L26/840-H1A-OCCSS-SBR-10-277-DRV-UNV OR EQUAL)
OA	25W LED @ 2,500 LUMENS	277 V	SURFACE WALL @ 9'-0" A.F.F.	DARK BRONZE	EXTERIOR WALL MOUNT FULL CUT-OFF FIXTURE W/ ELECTRONIC DRIVER. (HUBBELL #RWL1-48L-20-5K7-4W-UNV-DBT-E-2DR-PC OR EQUAL)
OB	157W LED @ 19,500 LUMENS	277 V	SURFACE WALL @ 30'-0" A.F.F.	DARK BRONZE	EXTERIOR WALL MOUNT FULL CUT-OFF FIXTURE W/ ELECTRONIC DRIVER. (HUBBELL #RWL2-160L-155-5K7-4W-UNV-DBT OR EQUAL)
OC	45W LED @ 5,500 LUMENS	277 V	SURFACE WALL @ 16'-0" A.F.F.	DARK BRONZE	EXTERIOR WALL MOUNT FULLCUT-OFF FIXTURE W/ ELECTRONIC DRIVER. (HUBBELL #RWL1-48L-45-5K7-4W-UNV-DBT OR EQUAL)
X1	HALOGEN PAR LAMP	277 V	SURFACE WALL @ 7'-0" A.F.F.	BLACK	COMBINATION EXIT/EMERGENCY FIXTURE W/ GREEN LETTERS, BLACK HOUSING, LONG LIFE "LED" LAMPS, 1.2WATT LEDS AND EMERGENCY BATTERY BACK UP SYSTEM. PROVIDE EXTERIOR REMOTE EGRESS HEAD WHERE SHOWN.
X2	LONG LIFE "LED" LAMPS	277 V	SURFACE WALL AT 8'-0"A.F.F.	WHITE	EMERGENCY FIXTURE W/ WHITE HOUSING, LED LAMPS, EMERGENCY BATTERY BACK UP SYSTEM AND TIME DELAY. (NICOR LIGHTING #EML110UNVWH OR EQUAL)

TOOLING EQUIPMENT INTERNATIONAL FOUNDRY ADDITION

12550 AND 12560 CENTER DRIVE, LIVONIA, MI

ENGINEERING BY:
GODWIN + ASSOCIATES
architects & engineers
1200 E. Woodhurst, D - 100 Springfield, Missouri 65804
(417) 887-2667 Fax (417) 887-3215

HOPPE DESIGN, LLC
47032 McBRIDE, BELLEVILLE, MI 48111
734-218-2492

REVISIONS

PROJECT: 2003
DATE: 04.30.21
DRAWN: MLM
CHECKED: MLM

NOTES, SCHEDULES AND DETAILS

Sheet Number

E-0

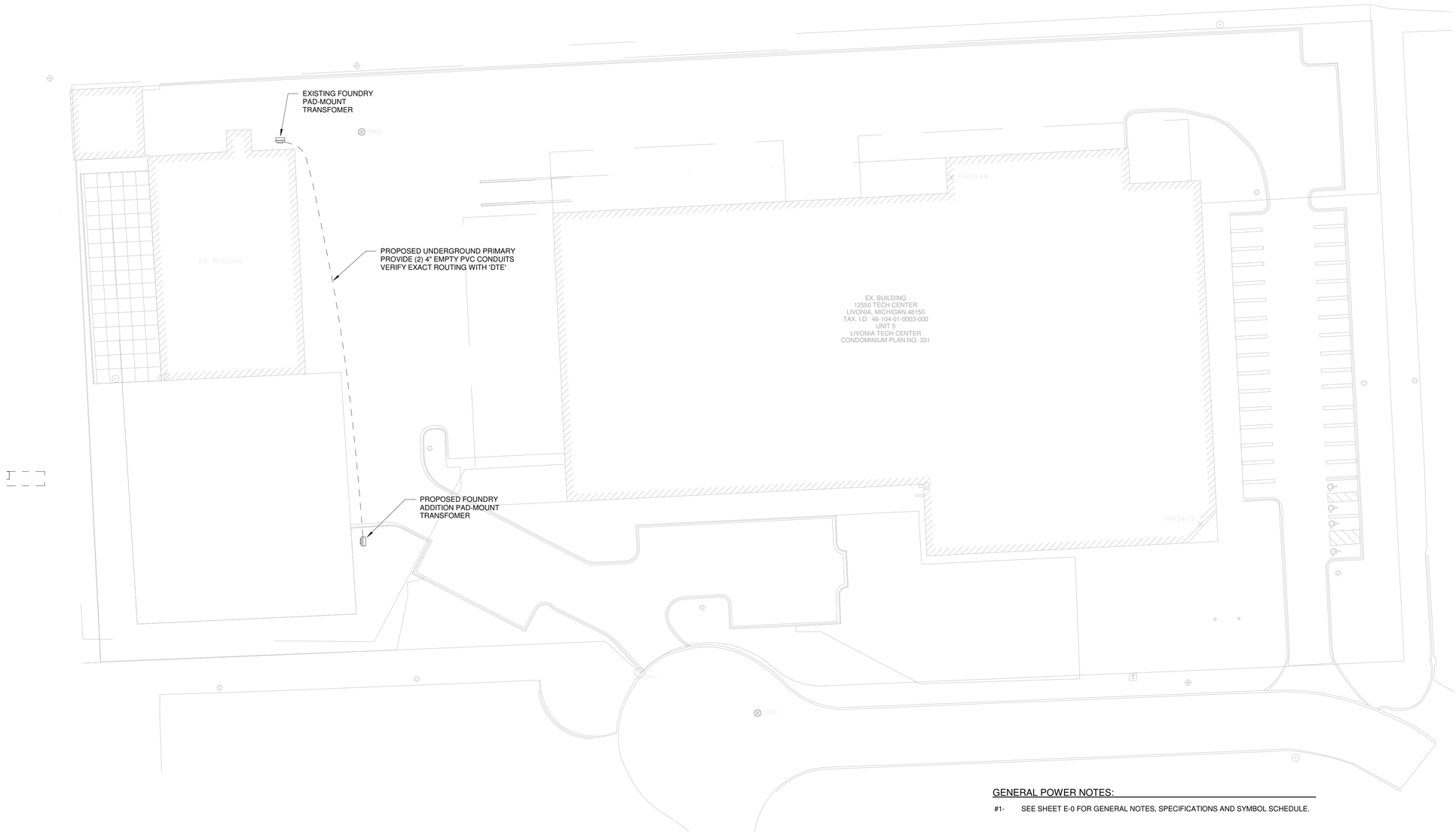

GENERAL POWER NOTES:

#1- SEE SHEET E-0 FOR GENERAL NOTES, SPECIFICATIONS AND SYMBOL SCHEDULE.

ELECTRICAL SITE PLAN

1" = 30'-0"

TOOLING EQUIPMENT INTERNATIONAL
FOUNDRY ADDITION

12550 AND 12560 CENTER DRIVE, LIVONIA, MI



ENGINEERING BY:
GODWIN + ASSOCIATES
architects & engineers
1200 E. Woodhurst, D - 100, Springfield, Missouri 65804
(417) 887-2667 Fax (417) 887-9215

HOPPE DESIGN, LLC
47032 McBRIDE, BELLEVILLE, MI 48111
734-218-2492

REVISIONS

PROJECT: 2003
DATE: 04.30.21
DRAWN: MLM
CHECKED: MLM

ELECTRICAL
SITE PLAN

Sheet Number

E-1

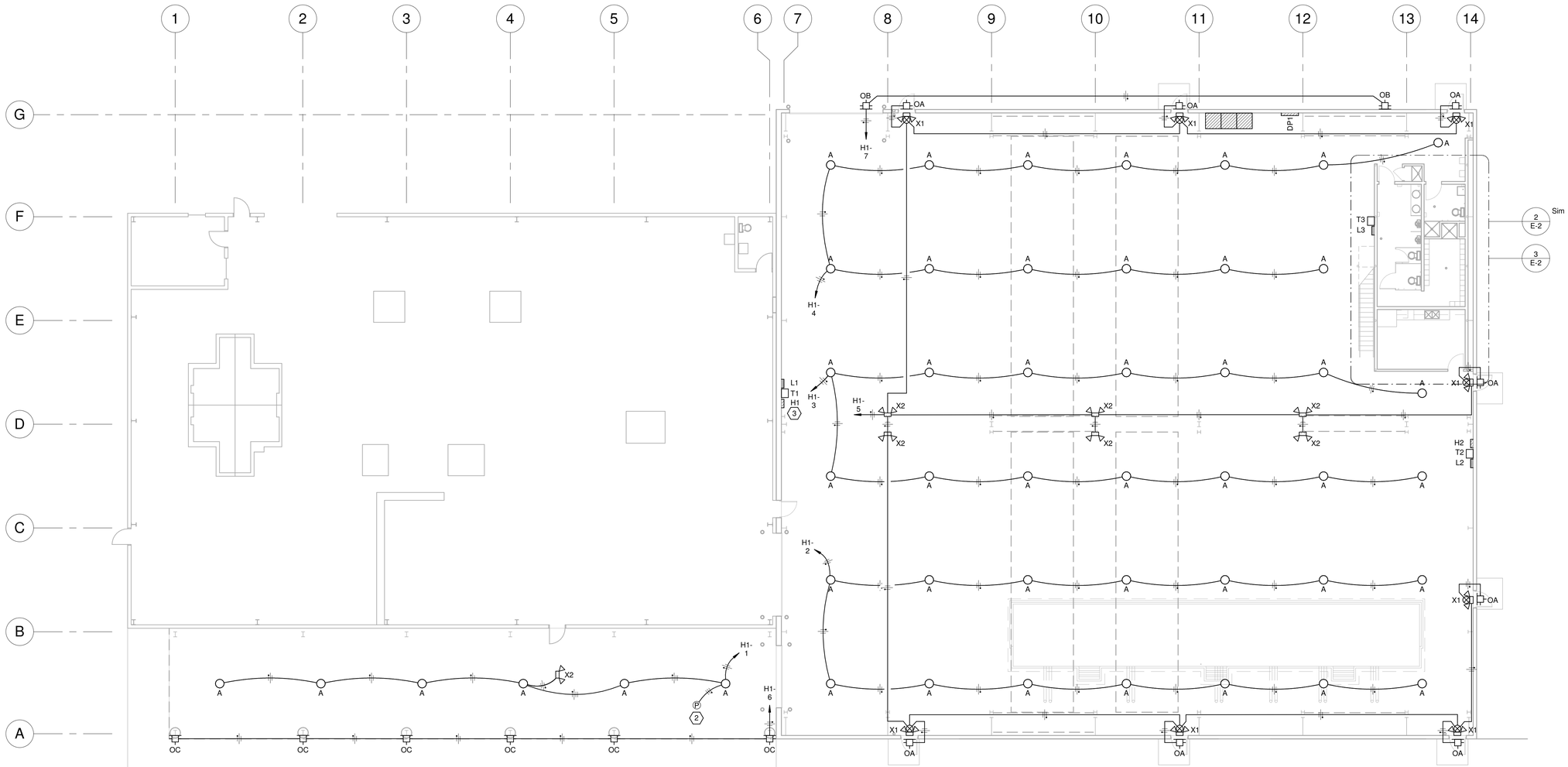

FACILITY LIGHTING PLAN

3/32" = 1'-0"

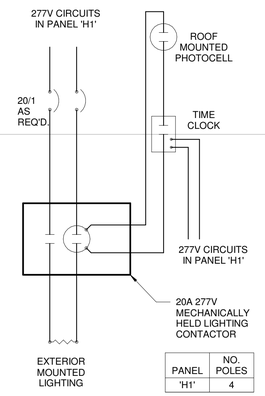

PANEL	NO. POLES
'H1'	4

EXTERIOR LIGHTING CONTROL SCHEME

LIGHTING NOTES:

#1- MINIMUM CONDUCTOR SIZE FOR HOME RUNS SHALL BE #10 AWG IN 3/4"C UNLESS NOTED OTHERWISE.

#2- CONNECT ALL EMERGENCY EGRESS FIXTURES AND EXIT SIGNS AHEAD OF ANY LIGHTING CONTROL DEVICES.

#3- SEE SHEET E-0 FOR LIGHTING AND EXHAUST FAN CONTROL DIAGRAMS.

LIGHTING NOTES BY SYMBOL:

(1) CONNECT EXHAUST FAN TO RESTROOM LIGHTING CIRCUIT FOR ROOM CONTROL VIA MOTION SENSOR.

(2) PROVIDE A 120V LINE VOLTAGE ROOF MOUNTED PHOTOCELL FOR CONTROL OF UNDER CANOPY LIGHTING. TORK #2000 OR EQUAL. PROVIDE MANUAL SPST SWITCH IN SERIES WITH PHOTOCELL.

(3) ALL EXTERIOR LIGHTING TO BE CONTROLLED THROUGH A PHOTOCELL VIA LIGHTING CONTACTORS. PROVIDE CONTACTORS ABOVE EACH LIGHTING PANEL FROM WHICH EXTERIOR LIGHTING IS FED. SEE DETAIL THIS SHEET.

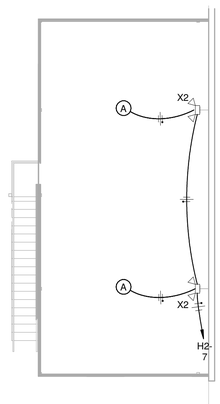

MEZZANINE LIGHTING PLAN

1/8" = 1'-0"

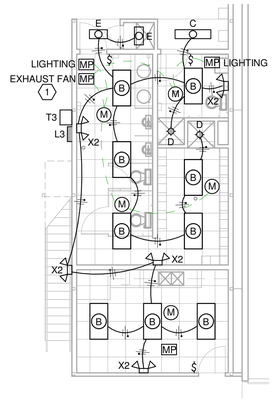

ENLARGED LIGHTING PLAN

1/8" = 1'-0"

TOOLING EQUIPMENT INTERNATIONAL FOUNDRY ADDITION

12550 AND 12560 CENTER DRIVE, LIVONIA, MI

STATE OF MICHIGAN
MICHAEL L. McCORMICK
ENGINEER
NO. 05/18/21
LICENSED PROFESSIONAL ENGINEER

ENGINEERING BY:
GODWIN + ASSOCIATES
architects & engineers
1200 E. Woodhurst, D - 100 Springfield, Missouri 65804
(417) 887-2067 Fax (417) 887-3215

HOPPE DESIGN, LLC
47032 McBRIDE BELLEVILLE, MI 48111
734-218-2492

REVISIONS

PROJECT: 2003
DATE: 04.30.21
DRAWN: MLM
CHECKED: MLM

FACILITY LIGHTING PLAN

Sheet Number

E-2

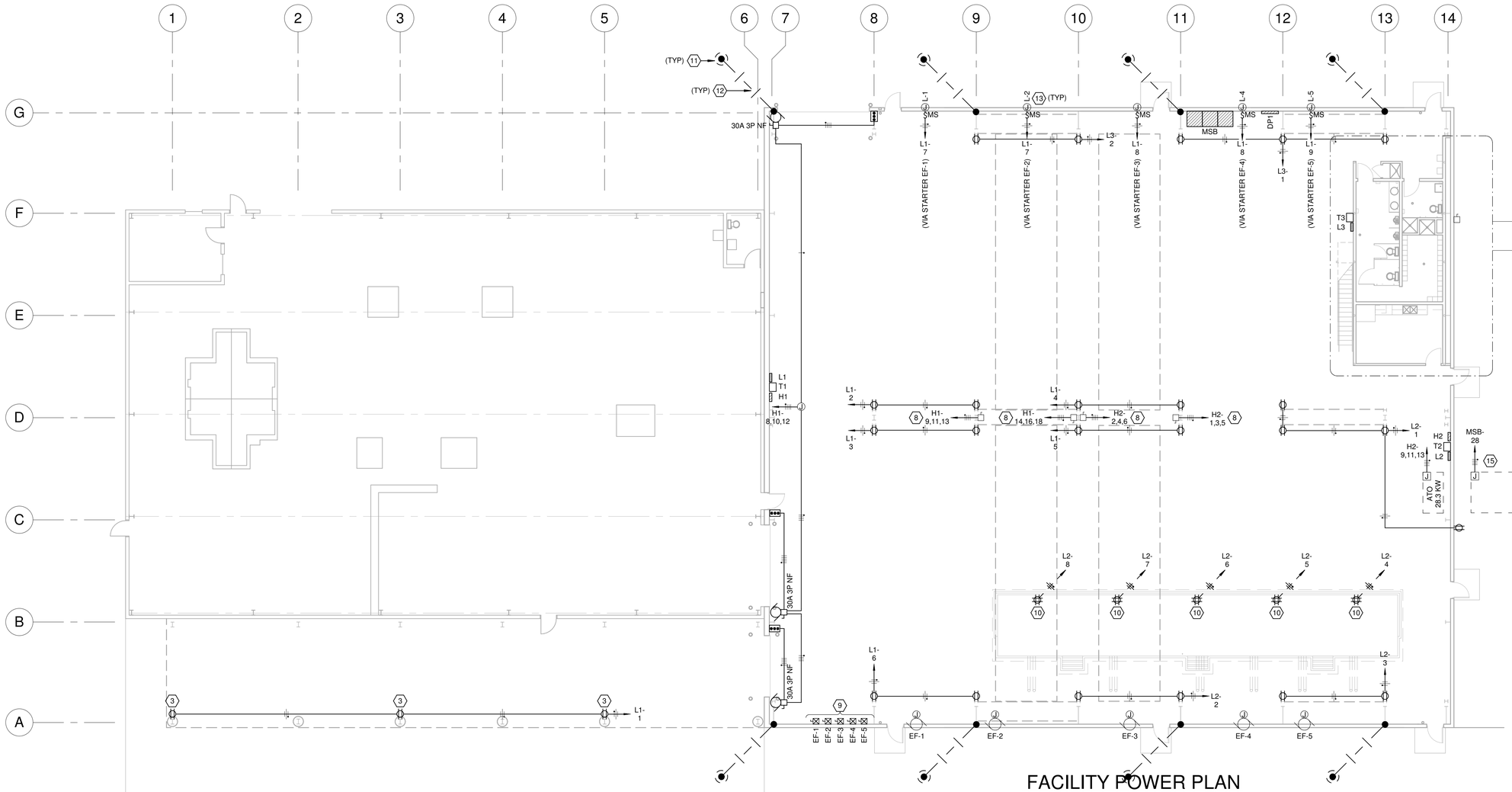

FACILITY POWER PLAN

3/32" = 1'-0"

GENERAL POWER NOTES:

#1- VERIFY EXACT LOCATIONS AND POINTS OF CONNECTION TO ALL MECHANICAL EQUIPMENT BEFORE CONDUIT ROUGH-IN.

#2- SEE SHEET E-0 FOR GENERAL NOTES, SPECIFICATIONS AND SYMBOL SCHEDULE.

#3- ALL 120V 20A FOUNDRY AREA RECEPTACLES SHOWN THIS SHEET SHALL BE MOUNTED AT 48" A.F.F. UNLESS NOTED OTHERWISE.

#4- MINIUMUM BRANCH CIRCUIT CONDUCTOR SIZE TO BE #10 AWG.

POWER NOTES BY SYMBOL:

1. RESTROOM EXHAUST FAN POWERED AND CONTROLLED BY RESTROOM LIGHTING CIRCUIT. SEE SHEET E-2 FOR SWITCH LOCATIONS.
2. PROVIDE 30A 250V 3-POLE SNAP SWITCH FOR WATER HEATER DISCONNECT. BRANCH CIRCUIT TO BE 3 #10 AWG& 1 #10 GRD IN 3/4"C.
3. PROVIDE GROUND FAULT CIRCUIT INTERRUPTER (GFCI), WEATHER RESISTANT (WR) TYPE RECEPTACLE IN AN EXTRA DUTY IN-USE WEATHERPROOF COVER.
4. PROVIDE A GFCI RECEPTACLE AT 44" A.F.F. FOR ABOVE COUNTER USE.
5. PROVIDE RECEPTACLE UNDER COUNTER FOR DISWASHER.
6. PROVIDE OUTLET UNDER SINK AT 18" A.F.F. CONTROLLED BY SINGLE POLE SWITCH AT 42" A.F.F. FOR GARBAGE DISPOSAL.
7. COORDINATE EXACT LOCATION, MOUNTING HEIGHT AND CONNECTION REQUIREMENTS FOR HAND DRYER WITH GENERAL CONCTRACTOR.
8. PROVIDE A 60A 480V 3P NF DISCONNECT SWITCH FOR 5-TON OVERHEAD CRANE. VERIFY EXACT CRANE BUS RAIL CONNECTION POINT BEFORE CONDUIT ROUGH-IN. BRANCH CIRCUIT TO BE 3 #8 & 1 #10 GRD IN 3/4"C
9. MANUAL MOTOR STARTER/DISCONNECT WITH RUN INDICATION LIGHT AND AUX RELAY FOR LOUVER CONTROL. COORDINATE LOCATIONS WITH OWNER.
10. COORDINATE EXACT QUAD RECEPTACLE LOCATION IN PIT WITH OWNER. ROUTE BRANCH CIRCUIT CONDUCTORS UNDER FLOOR TO PANEL.
11. PROVIDE A 3/4" DIA X 10'-0" COPPERCLAD DRIVEN GROUND ROD AS SHOWN AROUND PERIMETER.
12. PROVIDE A #4/0 AWG BARE COPPER CONDUCTOR JUMPER FROM THE GROUND ROD INTO THE BUILDING STRUCTURE.
13. PROVIDE POWER FOR MOTORIZED LOUVER. INTERLOCK WITH ASSOCIATED EXHAUST FAN. COORDINATE DETAILS WITH DIVISION 23.
14. PROVIDE A WEATHER RESISTANT (WR) GROUND FAULT CIRCUIT INTERRUPTER (GFCI) RECEPTACLE IN AN EXTRA DUTY IN-USE WEATHERPROOF COVER.
15. PROVIDE ALTERNATE PRICE FOR PAD MOUNTED CONDENSING UNIT CONNECTION. BRANCH CIRCUIT TO BE 3 #4/0 AWG & 1 #4 GRD IN 2"C. DISCONNECTING MEANS PROVIDED WITH EQUIPMENT.
16. PROVIDE SINGLE POLE MOTOR RATED SNAP SWITCH FOR AHU LOCAL DISCONNECTING MEANS.

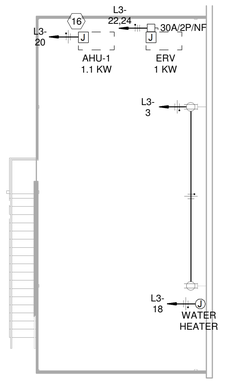

MEZZANINE POWER PLAN

1/8" = 1'-0"

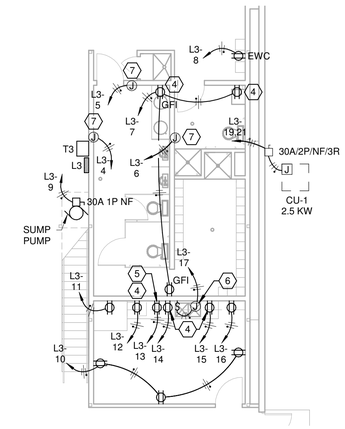

ENLARGED POWER PLAN

1/8" = 1'-0"

TOOLING EQUIPMENT INTERNATIONAL FOUNDRY ADDITION

12550 AND 12560 CENTER DRIVE, LIVONIA, MI

STATE OF MICHIGAN
Michael L. McCormick
McCORMICK
ENGINEER
NO. 05/15/21
LICENSED PROFESSIONAL ENGINEER

ENGINEERING BY:
GODWIN + ASSOCIATES
architects & engineers
1200 E. Woodhurst, D - 100, Springfield, Missouri 65804
(417) 887-2667 Fax (417) 887-9215

HOPPE DESIGN, LLC
47032 McBRIDE, BELLEVILLE, MI 48111
734-218-2402

REVISIONS

PROJECT: 2003
DATE: 04.30.21
DRAWN: MLM
CHECKED: MLM

FACILITY POWER PLAN

Sheet Number

E-3

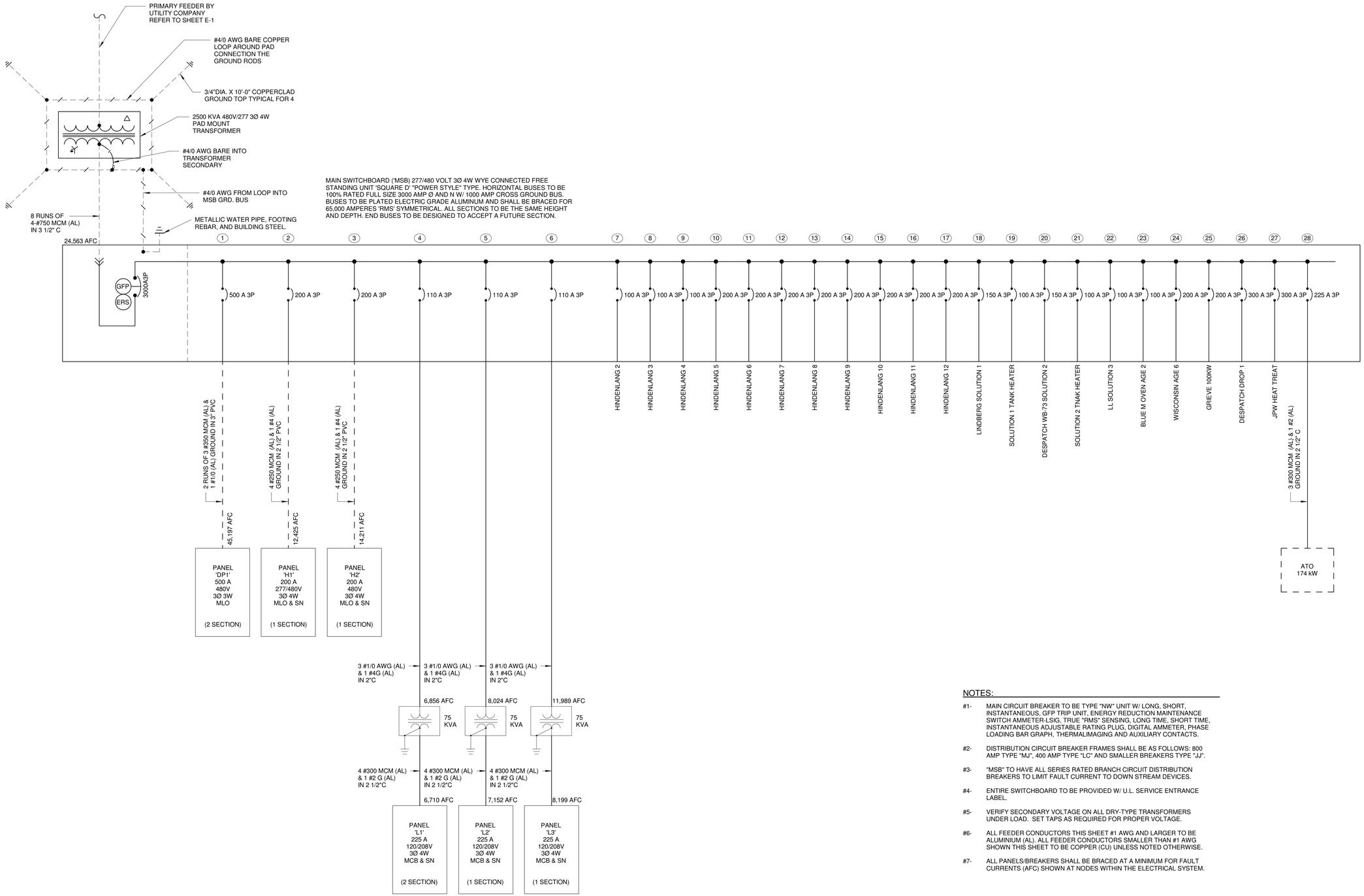

NOTES:

#1- MAIN CIRCUIT BREAKER TO BE TYPE "NW" UNIT W/ LONG, SHORT, INSTANTANEOUS, GFP TRIP UNIT, ENERGY REDUCTION MAINTENANCE SWITCH AMMETER-LSIG, TRUE "RMS" SENSING, LONG TIME, SHORT TIME, INSTANTANEOUS ADJUSTABLE RATING PLUG, DIGITAL AMMETER, PHASE LOADING BAR GRAPH, THERMALIMAGING AND AUXILIARY CONTACTS.

#2- DISTRIBUTION CIRCUIT BREAKER FRAMES SHALL BE AS FOLLOWS: 800 AMP TYPE "MJ", 400 AMP TYPE "LC" AND SMALLER BREAKERS TYPE "JJ".

#3- "MSB" TO HAVE ALL SERIES RATED BRANCH CIRCUIT DISTRIBUTION BREAKERS TO LIMIT FAULT CURRENT TO DOWN STREAM DEVICES.

#4- ENTIRE SWITCHBOARD TO BE PROVIDED W/ U.L. SERVICE ENTRANCE LABEL.

#5- VERIFY SECONDARY VOLTAGE ON ALL DRY-TYPE TRANSFORMERS UNDER LOAD. SET TAPS AS REQUIRED FOR PROPER VOLTAGE.

#6- ALL FEEDER CONDUCTORS THIS SHEET #1 AWG AND LARGER TO BE ALUMINIUM (AL). ALL FEEDER CONDUCTORS SMALLER THAN #1 AWG SHOWN THIS SHEET TO BE COPPER (CU) UNLESS NOTED OTHERWISE.

#7- ALL PANELS/BREAKERS SHALL BE BRACED AT A MINIMUM FOR FAULT CURRENTS (AFC) SHOWN AT NODES WITHIN THE ELECTRICAL SYSTEM.

TOOLING EQUIPMENT INTERNATIONAL FOUNDRY ADDITION

12550 AND 12560 CENTER DRIVE, LIVONIA, MI

STATE OF MICHIGAN — MICHAEL L. McCORMICK — ENGINEER — NO. 6201052340 — LICENSED PROFESSIONAL ENGINEER — 05/18/21

ENGINEERING BY:
GODWIN + ASSOCIATES
architects & engineers
1200 E. Woodhurst, D - 100 Springfield, Missouri 65804
(417) 887-2907 Fax (417) 887-3215

HOPPE DESIGN, LLC
47032 McBRIDE, BELLEVILLE, MI 48111
734-218-2492

REVISIONS

PROJECT: 2003
DATE: 04.30.21
DRAWN: MLM
CHECKED: MLM

ONE-LINE RISER DIAGRAM

Sheet Number

E-4

BRANCH PANEL: DP1

VOLTAGE AND PHASE: 480 VOLT, 3ø, 3W
MOUNTING: SURFACE
ENCLOSURE: NEMA 1
MAINS RATING: 500 A
MAINS TYPE: MLO

CKT	TRIP	POLES	TYPE	FEED	A		B		C		FEED	TYPE	POLES	TRIP	CKT
1					3.7	3.7									2
3	20 A	3		HINDENLANG STALK HEATER 1			3.7	3.7			HINDENLANG STALK HEATER 2		3	20 A	4
5									3.7	3.7					6
7					3.7	3.7									8
9	20 A	3		HINDENLANG STALK HEATER 3			3.7	3.7			HINDENLANG STALK HEATER 4		3	20 A	10
11									3.7	3.7					12
13					5.5	5.5									14
15	30 A	3		HINDENLANG DBL STALK HEATER 5			5.5	5.5			HINDENLANG DBL STALK HEATER 6		3	30 A	16
17									5.5	5.5					18
19					8.0	8.0									20
21	50 A	3		GRIEVE O-D-1 AGE 3			8.0	8.0			GRIEVE O-D-3 AGE 3		3	50 A	22
23									8.0	8.0					24
25					6.3	10.0									26
27	50 A	3		DISPATCH AGE 5			6.3	10.0			ROBOT DEGATING SYSTEM		3	50 A	28
29									6.3	10.0					30
31					6.7	6.7									32
33	30 A	3		WELDING OUTLET			6.7	6.7			WELDING OUTLET		3	30 A	34
35									6.7	6.7					36
37					6.7	6.7									38
39	30 A	3		WELDING OUTLET			6.7	6.7			WELDING OUTLET		3	30 A	40
41									6.7	6.7					42
43	--	1		SPACE	--	--					SPACE		1	--	44
45	--	1		SPACE			--	--			SPACE		1	--	46
47	--	1		SPACE					--	--	SPACE		1	--	48
49	--	1		SPACE	--	--					SPACE		1	--	50
51	--	1		SPACE			--	--			SPACE		1	--	52
53	--	1		SPACE					--	--	SPACE		1	--	54
				TOTAL KW / PHASE:	84.8 kW		84.8 kW		84.8 kW						
				TOTAL AMPS / PHASE:	306 A		306 A		306 A						
PHASE TOTAL				**TOTAL KW:**	254.3 kW										
				TOTAL AMPS:	306 A										

BRANCH PANEL: H2

VOLTAGE AND PHASE: 480/277 VOLT, 3ø, 4W
MOUNTING: SURFACE
ENCLOSURE: NEMA 1
MAINS RATING: 225 A
MAINS TYPE: MLO & SN

CKT	TRIP	POLES	TYPE	FEED	A		B		C		FEED	TYPE	POLES	TRIP	CKT
1					6.7	6.7									2
3	30 A	3		5-TON OVERHEAD CRANE			6.7	6.7			5-TON OVERHEAD CRANE		3	30 A	4
5									6.7	6.7					6
7	20 A	1		INTERIOR LIGHTING	0.4	0.5					INTERIOR LIGHTING		1	20 A	8
9							9.4	0.0			SPARE		1	20 A	10
11	70 A	3		ATO					9.4	0.0	SPARE		1	20 A	12
13					9.4	0.0					SPARE		1	20 A	14
15	20 A	1		SPARE			0.0	0.0			SPARE		1	20 A	16
17	20 A	1		SPARE					0.0	0.0	SPARE		1	20 A	18
19	20 A	1		SPARE	0.0	0.0					SPARE		1	20 A	20
21	--	1		SPACE			--	--			SPACE		1	--	22
23	--	1		SPACE					--	--	SPACE		1	--	24
25	--	1		SPACE	--	--					SPACE		1	--	26
27	--	1		SPACE			--	--			SPACE		1	--	28
29	--	1		SPACE					--	--	SPACE		1	--	30
31	--	1		SPACE	--	--					SPACE		1	--	32
33	--	1		SPACE			--	--			SPACE		1	--	34
35	--	1		SPACE					--	--	SPACE		1	--	36
37	--	1		SPACE	--	--					SPACE		1	--	38
39	--	1		SPACE			--	--			SPACE		1	--	40
41	--	1		SPACE					--	--	SPACE		1	--	42
				TOTAL KW / PHASE:	23.7 kW		22.8 kW		22.8 kW						
				TOTAL AMPS / PHASE:	85 A		82 A		82 A						
PHASE TOTAL				**TOTAL KW:**	69.2 kW										
				TOTAL AMPS:	83 A										

BRANCH PANEL: H1

VOLTAGE AND PHASE: 480/277 VOLT, 3ø, 4W
MOUNTING: SURFACE
ENCLOSURE: NEMA 1
MAINS RATING: 225 A
MAINS TYPE: MLO & SN

CKT	TRIP	POLES	TYPE	FEED	A		B		C		FEED	TYPE	POLES	TRIP	CKT
1	20 A	1		WEST CANOPY LIGHTING	1.1	2.5					WEST BAY LIGHTING		1	20 A	2
3	20 A	1		CENTER HIGHBAY LIGHTING			2.5	2.4			INTERIOR LIGHTING		1	20 A	4
5	20 A	1		EXIT/EGRESS LIGHTING					1.3	0.5	EXTERIOR WEST STORAGE LIGHTING	CNTR	1	20 A	6
7	20 A	1	CNTR	EXTERIOR LIGHTING	0.2	2.9									8
9							6.7	1.8			OVERHEAD DOORS		3	20 A	10
11	30 A	3		5-TON OVERHEAD CRANE					6.7	1.8					12
13					6.7	6.7									14
15	20 A	1		SPARE			0.0	6.7			5-TON OVERHEAD CRANE		3	30 A	16
17	20 A	1		SPARE					0.0	6.7					18
19	20 A	1		SPARE	0.0	0.0					SPARE		1	20 A	20
21	--	1		SPACE			--	--			SPACE		1	--	22
23	--	1		SPACE					--	--	SPACE		1	--	24
25	--	1		SPACE	--	--					SPACE		1	--	26
27	--	1		SPACE			--	--			SPACE		1	--	28
29	--	1		SPACE					--	--	SPACE		1	--	30
31	--	1		SPACE	--	--					SPACE		1	--	32
33	--	1		SPACE			--	--			SPACE		1	--	34
35	--	1		SPACE					--	--	SPACE		1	--	36
37	--	1		SPACE	--	--					SPACE		1	--	38
39	--	1		SPACE			--	--			SPACE		1	--	40
41	--	1		SPACE					--	--	SPACE		1	--	42
				TOTAL KW / PHASE:	20.1 kW		20.0 kW		16.9 kW						
				TOTAL AMPS / PHASE:	74 A		74 A		61 A						
PHASE TOTAL				**TOTAL KW:**	57.0 kW										
				TOTAL AMPS:	69 A										

Switchboard: MSB

Location:
Supply From:
Mounting: FREE STANDING ENCLOSURE
Enclosure: NEMA 1
Volts: 480/277 VOLT
Phases: 3
Wires: 4
A.I.C. Rating:
Mains Type: MCB & SN
Mains Rating: 2500 A
MCB Rating: 2500 A

Notes:

CKT	Circuit Description	# of Poles	Frame Size	Trip Rating	Load	Remarks
1	PANEL 'DP1'	3	600 A	500 A	254.3 kW	
2	PANEL 'H1'	3	400 A	200 A	57.0 kW	
3	PANEL 'H2'	3	400 A	200 A	69.2 kW	
4	75 KVA XFMR 'T1'	3	200 A	110 A	4.8 kW	
5	75 KVA XFMR 'T2	3	200 A	110 A	3.2 kW	
6	75 KVA XFMR 'T3'	3	200 A	110 A	20.1 kW	
7	HINDENLANG2	3	200 A	100 A	60.0 kW	
8	HINDENLANG 3	3	200 A	100 A	60.0 kW	
9	HINDENLANG 4	3	200 A	100 A	60.0 kW	
10	HINDENLANG 5	3	400 A	200 A	110.0 kW	
11	HINDENLANG 6	3	400 A	200 A	110.0 kW	
12	HINDENLANG 7	3	400 A	200 A	110.0 kW	
13	HINDENLANG 8	3	400 A	200 A	110.0 kW	
14	HINDENLANG 9	3	400 A	200 A	110.0 kW	
15	HINDENLANG 10	3	400 A	200 A	110.0 kW	
16	HINDENLANG 11	3	400 A	200 A	110.0 kW	
17	HINDENLANG 12	3	400 A	200 A	110.0 kW	
18	LINDBERG SOLUTION 1	3	200 A	150 A	100.0 kW	
19	SOLUTION 1 TANK HEATER	3	200 A	100 A	45.0 kW	
20	DESPATCH WB73 SOLUTION 2	3	200 A	150 A	100.0 kW	
21	SOLUTION 2 TANK HEATER	3	200 A	100 A	45.0 kW	
22	LL SOLUTION 3	3	200 A	100 A	56.0 kW	
23	BLUE M OVEN AGE 2	3	200 A	100 A	47.0 kW	
24	WISCONSIN AGE 6	3	400 A	200 A	120.0 kW	
25	GRIEVE 100KW	3	400 A	200 A	100.0 kW	
26	DESPATCH DROP 1	3	400 A	300 A	200.0 kW	
27	JPW HEAT TREAT	3	400 A	300 A	200.0 kW	
28	HVAC LOAD	3	400 A	20 A	174.0 kW	
29	SPACE	1	--	--	--	
30	SPACE	1	--	--	--	
				Total Conn. Load:	2655.7 kW	
				Total Amps:	3194 A	

Legend:

Load Classification	Connected Load	Demand Factor	Estimated Demand	Panel Totals	
INTERIOR LIGHTING	9.6 kW	100.00%	9.6 kW		
EXTERIOR LIGHTING	1.9 kW	100.00%	1.9 kW	**Total Conn. Load:**	2655.7 kW
HVAC LOAD	206.9 kW	100.00%	206.9 kW	**Total Est. Demand:**	2655.7 kW
MOTOR LOAD	94.1 kW	100.00%	94.1 kW	**Total Conn. Current:**	3194 A
RECEPTACLE	96.0 kW	100.00%	96.0 kW	**Total Est. Demand Current:**	3194 A
FOUNDRY EQUIPMENT	2247.3 kW	100.00%	2247.3 kW		

Notes:

PANELBOARD NOTES:

#1- ALL PANELBOARDS TO BE 'SQUARE D' OR AN APPROVED EQUAL.

#2- ALL PANELBOARDS TO HAVE PLATED ELECTRIC GRADE ALUMINUM BUSES, COVER MOUNTED PLASTIC ENGRAVED NAMEPLATES, AND 'NEMA-1' ENCLOSURES. NAMEPLATES TO BE FASTENED TO COVER W/ SCREWS.

#3- 120/208 VOLT BRANCH CIRCUIT BREAKERS TO HAVE A MINIMUM OF 10,000 AMPERES 'RMS' SYMMETRCIAL INTERRUPTING CAPACITY.

#4- ALL SECTIONS OF MULTISECTION PANELBOARDS TO BE THE SAME SIZE.

#5- MAXIMUM NUMBER OF POLES IN A SINGLE SECTION TO BE 54.

#6- TYPE DESIGNATIONS COLUMN IN PANELBOARD SCHEDULES ARE DEFINED AS FOLLOWS:

GFCI: GROUND FAULT CIRCUIT INTERRUPTER BREAKER
LOCK: PROVIDE HANDLE LOCK
CNTR: INDICATES CIRCUIT CONTROLLED BY CONTACTOR

#7-

* - FIRE ALARM CONTROL PANEL CIRCUIT BREAKER TO HAVE RED MARKING AND SHALL BE IDENTIFIED AS FIRE ALARM CIRCUIT.

TOOLING EQUIPMENT INTERNATIONAL
FOUNDRY ADDITION
12550 AND 12560 CENTER DRIVE, LIVONIA, MI

MICHAEL McCORMICK ENGINEER NO. 6201062440 05/18/21 — STATE OF MICHIGAN LICENSED PROFESSIONAL ENGINEER

ENGINEERING BY:
GODWIN + ASSOCIATES
architects & engineers
1200 E. Woodhurst, D - 100 , Springfield, Missouri 65804
(417) 887-2667 Fax (417) 887-3215

HOPPE DESIGN, LLC
47032 McBRIDE, BELLEVILLE, MI 48111
734-218-2492

REVISIONS

PROJECT: 2003
DATE: 04.30.21
DRAWN: MLM
CHECKED: MLM

PANELBOARD SCHEDULES

Sheet Number

E-5

BRANCH PANEL: L1

VOLTAGE AND PHASE: 120/208 VOLT, 3ø, 4W
MOUNTING: SURFACE
ENCLOSURE: NEMA 1

MAINS RATING: 225 A
MAINS TYPE: MCB & SN

CKT	TRIP	POLES	TYPE	FEED	A		B		C		FEED	TYPE	POLES	TRIP	CKT
1	20 A	1		RECEPTACLE	0.5	0.4					FOUNDRY RECEPTACLE		1	20 A	2
3	20 A	1		FOUNDRY RECEPTACLE			0.4	0.4			FOUNDRY RECEPTACLE		1	20 A	4
5	20 A	1		FOUNDRY RECEPTACLE					0.4	0.4	RECEPTACLE		1	20 A	6
7	20 A	1		L-1 / L-2	1.0	1.0					L-3 / L-4		1	20 A	8
9	20 A	1		L-5			0.5	0.0			SPARE		1	20 A	10
11	20 A	1		SPARE					0.0	0.0	SPARE		1	20 A	12
13	20 A	1		SPARE	0.0	0.0					SPARE		1	20 A	14
15	20 A	1		SPARE			0.0	0.0			SPARE		1	20 A	16
17	20 A	1		SPARE					0.0	0.0	SPARE		1	20 A	18
19	20 A	1		SPARE	0.0	0.0					SPARE		1	20 A	20
21	20 A	1		SPARE			0.0	0.0			SPARE		1	20 A	22
23	20 A	1		SPARE					0.0	0.0	SPARE		1	20 A	24
25	20 A	1		SPARE	0.0	0.0					SPARE		1	20 A	26
27	20 A	1		SPARE			0.0	0.0			SPARE		1	20 A	28
29	20 A	1		SPARE					0.0	0.0	SPARE		1	20 A	30
31	20 A	1		SPARE	0.0	0.0					SPARE		1	20 A	32
33	20 A	1		SPARE			0.0	0.0			SPARE		1	20 A	34
35	20 A	1		SPARE					0.0	0.0	SPARE		1	20 A	36
37	--	1		SPACE	--	--					SPACE		1	--	38
39	--	1		SPACE			--	--			SPACE		1	--	40
41	--	1		SPACE					--	--	SPACE		1	--	42
				TOTAL KW / PHASE:	2.9 kW		1.2 kW		0.7 kW						
				TOTAL AMPS / PHASE:	25 A		11 A		6 A						
PHASE TOTAL				**TOTAL KW:**	4.8 kW										
				TOTAL AMPS:	13 A										

BRANCH PANEL: L2

VOLTAGE AND PHASE: 120/208 VOLT, 3ø, 4W
MOUNTING: SURFACE
ENCLOSURE: NEMA 1

MAINS RATING: 225 A
MAINS TYPE: MCB & SN

CKT	TRIP	POLES	TYPE	FEED	A		B		C		FEED	TYPE	POLES	TRIP	CKT
1	20 A	1		FOUNDRY RECEPTACLE	0.7	0.4					FOUNDRY RECEPTACLE		1	20 A	2
3	20 A	1		FOUNDRY RECEPTACLE			0.4	0.4			RECEPTACLE		1	20 A	4
5	20 A	1		RECEPTACLE					0.4	0.4	RECEPTACLE		1	20 A	6
7	20 A	1		RECEPTACLE	0.4	0.4					RECEPTACLE		1	20 A	8
9	20 A	1		SPARE			0.0	0.0			SPARE		1	20 A	10
11	20 A	1		SPARE					0.0	0.0	SPARE		1	20 A	12
13	20 A	1		SPARE	0.0	0.0					SPARE		1	20 A	14
15	20 A	1		SPARE			0.0	0.0			SPARE		1	20 A	16
17	20 A	1		SPARE					0.0	0.0	SPARE		1	20 A	18
19	20 A	1		SPARE	0.0	0.0					SPARE		1	20 A	20
21	20 A	1		SPARE			0.0	0.0			SPARE		1	20 A	22
23	20 A	1		SPARE					0.0	0.0	SPARE		1	20 A	24
25	20 A	1		SPARE	0.0	0.0					SPARE		1	20 A	26
27	20 A	1		SPARE			0.0	0.0			SPARE		1	20 A	28
29	20 A	1		SPARE					0.0	0.0	SPARE		1	20 A	30
31	20 A	1		SPARE	0.0	0.0					SPARE		1	20 A	32
33	20 A	1		SPARE			0.0	0.0			SPARE		1	20 A	34
35	20 A	1		SPARE					0.0	0.0	SPARE		1	20 A	36
37	--	1		SPACE	--	--					SPACE		1	--	38
39	--	1		SPACE			--	--			SPACE		1	--	40
41	--	1		SPACE					--	--	SPACE		1	--	42
				TOTAL KW / PHASE:	1.8 kW		0.7 kW		0.7 kW						
				TOTAL AMPS / PHASE:	15 A		6 A		6 A						
PHASE TOTAL				**TOTAL KW:**	3.2 kW										
				TOTAL AMPS:	9 A										

BRANCH PANEL: L3

VOLTAGE AND PHASE: 120/208 VOLT, 3ø, 4W
MOUNTING: SURFACE
ENCLOSURE: NEMA 1

MAINS RATING: 225 A
MAINS TYPE: MCB & SN

CKT	TRIP	POLES	TYPE	FEED	A		B		C		FEED	TYPE	POLES	TRIP	CKT
1	20 A	1		FOUNDRY RECEPTACLE	0.5	0.4					FOUNDRY RECEPTACLE		1	20 A	2
3	20 A	1		MEZZ RECEPTACLE			0.4	1.0			HAND DRYER	LOCK	1	20 A	4
5	20 A	1	LOCK	HAND DRYER					1.0	1.0	HAND DRYER	LOCK	1	20 A	6
7	20 A	1		RESTROOM GFCI RECEPTACLE	0.5	0.8					EWC	GFCI	1	20 A	8
9	20 A	1		SUMP PUMP			1.2	0.5			BREAK ROOM RECEPTACLE		1	20 A	10
11	20 A	1		VENDING					1.0	1.5	MICROWAVE		1	20 A	12
13	20 A	1		DISHWASHER	0.2	1.5					COFFEE MAKER		1	20 A	14
15	20 A	1		COUNTER RECEPTACLE			1.0	1.0			REFRIGERATOR		1	20 A	16
17	20 A	1		GARBAGE DISPOSAL					1.0	1.0	WATER HEATER RECIRC		1	20 A	18
19	20 A	2		CONDENSING UNIT (CU-1)	1.3	1.1					AHU-1		1	15 A	20
21							1.3	0.5			ERV		2	15 A	22
23	20 A	1		SPARE					0.0	0.5					24
25	20 A	1		SPARE	0.0	0.0					SPARE		1	20 A	26
27	20 A	1		SPARE			0.0	0.0			SPARE		1	20 A	28
29	20 A	1		SPARE					0.0	0.0	SPARE		1	20 A	30
31	20 A	1		SPARE	0.0	0.0					SPARE		1	20 A	32
33	20 A	1		SPARE			0.0	0.0			SPARE		1	20 A	34
35	20 A	1		SPARE					0.0	0.0	SPARE		1	20 A	36
37	20 A	1		SPARE	0.0	0.0					SPARE		1	20 A	38
39	20 A	1		SPARE			0.0	0.0			SPARE		1	20 A	40
41	20 A	1		SPARE					0.0	0.0	SPARE		1	20 A	42
				TOTAL KW / PHASE:	6.3 kW		6.9 kW		7.0 kW						
				TOTAL AMPS / PHASE:	52 A		58 A		59 A						
PHASE TOTAL				**TOTAL KW:**	20.1 kW										
				TOTAL AMPS:	56 A										

PANELBOARD NOTES:

#1- ALL PANELBOARDS TO BE 'SQUARE D' OR AN APPROVED EQUAL.

#2- ALL PANELBOARDS TO HAVE PLATED ELECTRIC GRADE ALUMINUM BUSES, COVER MOUNTED PLASTIC ENGRAVED NAMEPLATES, AND 'NEMA-1' ENCLOSURES. NAMEPLATES TO BE FASTENED TO COVER W/ SCREWS.

#3- 120/208 VOLT BRANCH CIRCUIT BREAKERS TO HAVE A MINIMUM OF 10,000 AMPERES 'RMS' SYMMETRCIAL INTERRUPTING CAPACITY.

#4- ALL SECTIONS OF MULTISECTION PANELBOARDS TO BE THE SAME SIZE.

#5- MAXIMUM NUMBER OF POLES IN A SINGLE SECTION TO BE 54.

#6- TYPE DESIGNATIONS COLUMN IN PANELBOARD SCHEDULES ARE DEFINED AS FOLLOWS:

GFCI: GROUND FAULT CIRCUIT INTERRUPTER BREAKER
LOCK: PROVIDE HANDLE LOCK
CNTR: INDICATES CIRCUIT CONTROLLED BY "ILC" RELAY

#7- * - FIRE ALARM CONTROL PANEL CIRCUIT BREAKER TO HAVE RED MARKING AND SHALL BE IDENTIFIED AS FIRE ALARM CIRCUIT.

TOOLING EQUIPMENT INTERNATIONAL FOUNDRY ADDITION

12550 AND 12560 CENTER DRIVE, LIVONIA, MI

STATE OF MICHIGAN
MICHAEL L. McCORMICK
ENGINEER
NO. 6201052340
LICENSED PROFESSIONAL ENGINEER

ENGINEERING BY:
GODWIN + ASSOCIATES
architects & engineers
1200 E. Woodhurst, D - 100, Springfield, Missouri 65804
(417) 887-2657 Fax (417) 887-3215

HOPPE DESIGN, LLC
47032 McBRIDE, BELLEVILLE, MI 48111
734-218-2492

REVISIONS

PROJECT: 2003
DATE: 04.30.21
DRAWN: MLM
CHECKED: MLM

PANELBOARD SCHEDULES

Sheet Number

E-6